PURPOSE-BUILT FROM THE GROUND UP

855E GREEN HYBRID MATERIAL HANDLER

Cummins QSM11-C360, Tier 4F
318 HP (237 kW)

Rubber Tired (M) - 169,756 lb (77,000 kg)
Crawler (R-HD) - 182,984 lb (83,000 kg)

SENNEBOGEN®

Purpose-Built – To Suit Your Purpose

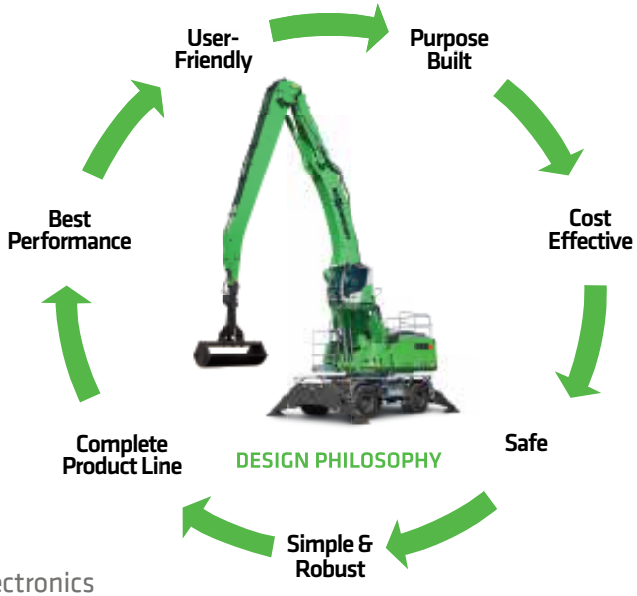

We're building smarter, to build *your* business.

Every SENNEBOGEN material handler begins with you, our customer, and the challenges you face every day. Our singular focus leads us to the simplest, most efficient engineering solutions.

With our Green Hybrid series of purpose-built material handlers, we're meeting our commitment to help you move more material, safely, at a lower cost:

- Innovative energy recovery system saves costs with every lift
- Interchangeable components across multiple platforms
- Industry standard parts for service & repairs
- Intelligent hydraulics in place of complex electronics
- Robust structures matched to heavy loads and stresses

Now in our third generation as a family-owned business, SENNEBOGEN takes pride in taking a personal interest in the needs of our customers. By listening and responding to their requirements, we have continuously delivered the world's best material handling solutions since 1952.

When you purchase a SENNEBOGEN machine, you'll know it was purpose-built for you, **from the ground up.**

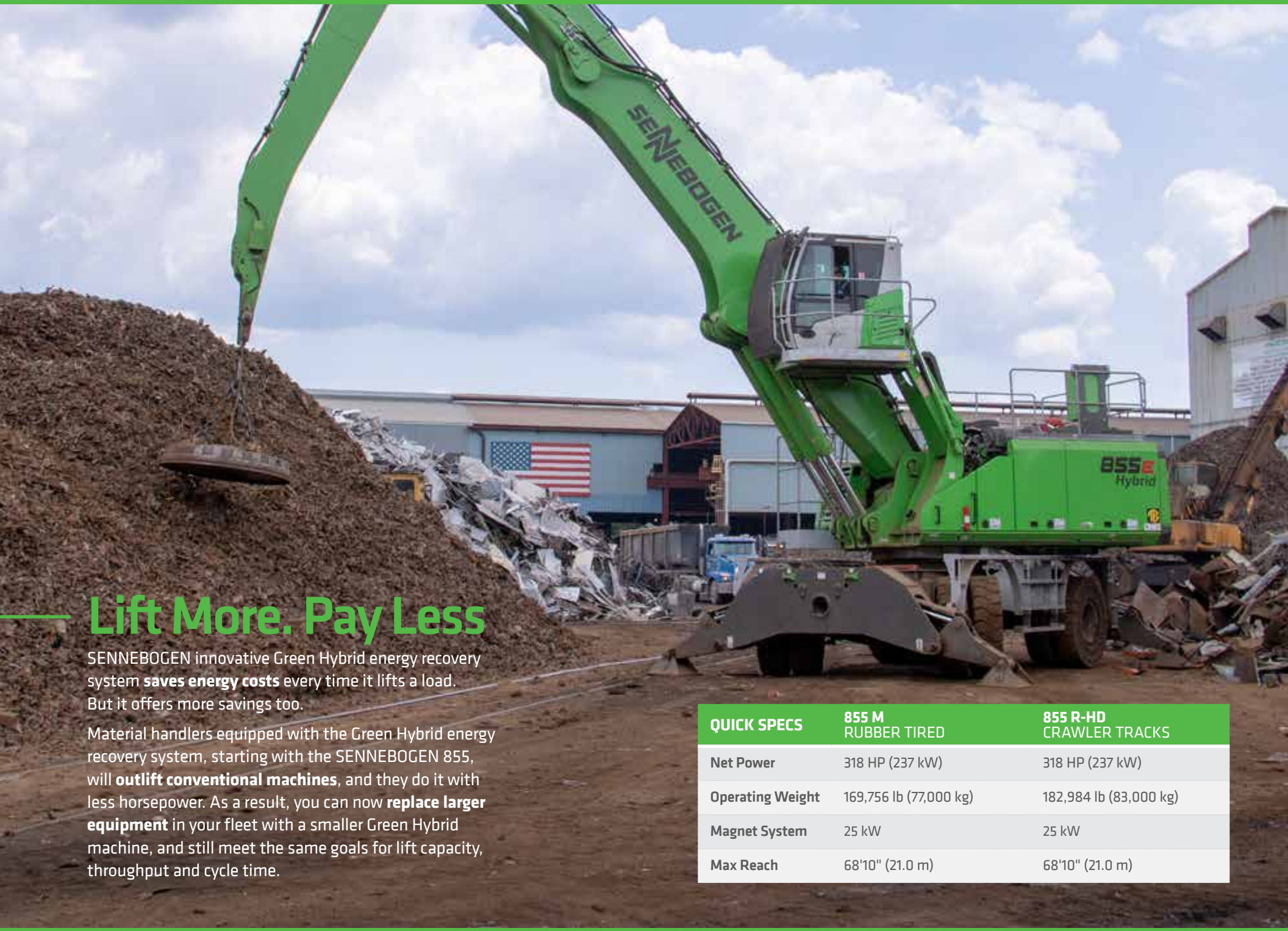

Lift More. Pay Less

SENNEBOGEN innovative Green Hybrid energy recovery system **saves energy costs** every time it lifts a load. But it offers more savings too.

Material handlers equipped with the Green Hybrid energy recovery system, starting with the SENNEBOGEN 855, will **outlift conventional machines**, and they do it with less horsepower. As a result, you can now **replace larger equipment** in your fleet with a smaller Green Hybrid machine, and still meet the same goals for lift capacity, throughput and cycle time.

QUICK SPECS	855 M RUBBER TIRED	855 R-HD CRAWLER TRACKS
Net Power	318 HP (237 kW)	318 HP (237 kW)
Operating Weight	169,756 lb (77,000 kg)	182,984 lb (83,000 kg)
Magnet System	25 kW	25 kW
Max Reach	68'10" (21.0 m)	68'10" (21.0 m)

Power

With its engineered efficiency and Green Hybrid energy recovery system, the 855 reduces operating costs and your environmental footprint whether you choose diesel power, electric drive or a combination of the two.

For reliable performance and ease of maintenance, SENNEBOGEN diesel machines are powered by industry-preferred Cummins engines.

Cab Configurations

The elevating Maxcab, now with bulletproof windshield and skylight as standard equipment, allows an unobstructed view in all directions for increased safety and productivity, even under harsh and adverse conditions. Optional features include:

- Windshield protective guard
- Skylight protection guard and/or FOPS guard
- Floor window

E270
with Maxcab

E300/260
with Maxcab

Skylift Type 700
with Maxcab

Skylift Type 900
with MasterCab

Platforms

The modular design of the 855 adapts easily to any required mounting for gantries, rail cars, barges and ship applications.

Booms and Sticks

A wide choice of powerful boom and stick configurations allows the 855 to adapt easily to match the specific lift and reach requirements of your operations.

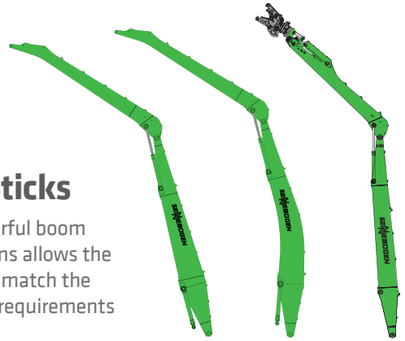

Attachments

SENNEBOGEN grapples and magnets complete your purpose-built solution with the same reliability as our 855 material handling machines. Your machine will also accept a full range of standard attachments from all brand-name manufacturers including:

- Orange-Peel Grab
- Clamshell
- Magnet Plates
- Mobile Shear Types
- Vacuum Lifting Device

SENNEBOGEN magnet systems are powered by Baldor generators with Hubbell controllers

UNDERCARRIAGE

Stable footprint
The centered point of rotation for the swing bearing allows for 360° equal lift capacity

Swing system
The large-diameter slewing ring provides excellent cycle times and swing torque for large loads

Multiple platforms
The modular 855 is designed to adapt to standard wheeled, tracked and pedestal mounts

CAB

Elevating Maxcabs
Various cab configurations maximize safety, loading accuracy and stability. Optionally available with an elevated fixed cab

Joystick steering
Unobstructed view for operator with highly responsive control

SENCON
Advanced diagnostic system with user-friendly multi-colored interface, available in multiple languages

Entry/exit
Maxcab sliding door with permanent catwalk for safe, easy entry and exit

Superior visibility
Large bulletproof glass front window and skylight as well as large side windows supplemented by 2-camera system are standard. Also available with glass floor

HYDRAULIC SYSTEM

Purpose-built design
Fully hydraulic controls require no special software to troubleshoot

Hybrid Technology
SENNEBOGEN's exclusive Green Hybrid captures energy on each downstroke of the boom, and releases it as "free" load-lifting power on each upstroke

HydroClean filtration
3-micron oil filtering with 99.95% efficiency absorbs water, prevents acid generation

Convenient servicing
All test ports are easily accessible in one place

UPPER CHASSIS

Upper carriage
Guarding surrounds upper deck to enhance safety for service technicians

One-piece center frame
Optimizes distribution of stresses and machine balance from boom pivot to counterweight

Reversible fan
Closed circuit drive with axial displacement pump allows fast change between normal and reverse

OSHA-compliant
Continuous 3-point contact access to upper deck with handrails and guarding from ground to cab

Longitudinal engine mount
Allows safe and easy access and unequaled fuel efficiency due to efficient cooling

Automatic lubrication
Extend component life with no waste, no spill hazards

BOOM & STICK

Limit switches
Limit switches on the boom and stick cylinders prevent high pressure peaks to provide a cushion for rod movement and prevent attachments from colliding with the cab

Boom pivot
Purpose-designed boom mounting point on the chassis for enhanced balance and lifting capacity

Cylinder protection
The boom and stick have been designed specifically for material handling applications. Hydraulic cylinders are mounted and protected by an open box frame to ensure uptime

SAFETY

Safety rails
Full guarding on upper decks provide safety for technicians on North American models

Fuses and relays
All fuses and relays are clearly labeled and easily accessible in a centrally located terminal box

Sliding door
The door slides open for safe ease of entry and exit from the cab

Bulletproof glass
Bulletproof windshield and skylight are standard on all new SENNEBOGEN models

Health & Safety: The First Step To Productivity

SENNEBOGEN is renowned as the industry leader in preventing downtime, and in protecting people.

Safety-conscious producers look for equipment that prevents liability costs and protects their most valued assets. SENNEBOGEN works closely with the operators and technicians who know our equipment best, and we listen to their ideas to make our machines the safest on any jobsite.

That's why ease of access, ground-to-cab guarding, sliding door cab entry, 360° visibility, battery disconnect switch and travel alarm are all standard features of your 855.

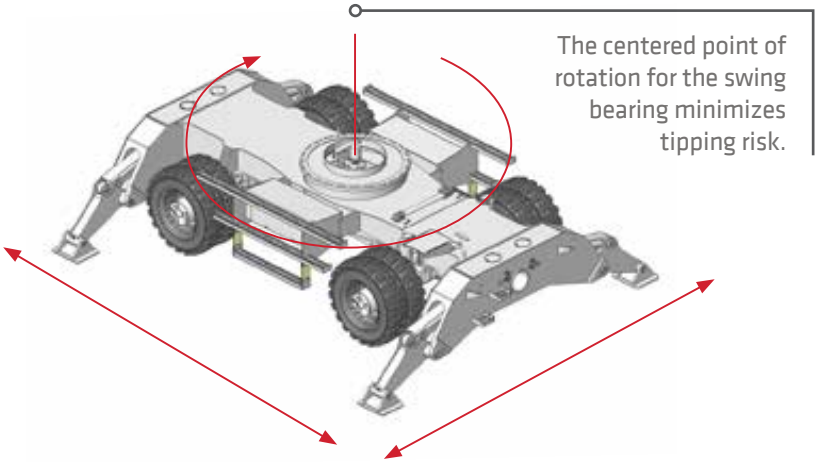

The centered point of rotation for the swing bearing minimizes tipping risk.

Dual cameras with views to the rear and to the right side are standard equipment.

Various optional guarding packages available to meet industry safety requirements.

Bulletproof windshield and skylight are now standard on all new SENNEBOGEN material handers.

Safe access to the upper deck is achieved with a permanent 3-point contact ladder with railings.

Handrails around the upper deck and anti-slip walking surfaces provide a safe working environment for service and maintenance crews.

All high pressure hydraulic hoses in the engine compartment are secured in sleeves to protect service personnel.

Maxcab's sliding door and guarded permanent catwalk provides the safest entry and exit in the industry.

SENNEBOGEN's Maxcab puts you in the driver's seat for jobsite safety.

All daily service is completed with easy access to all maintenance points.

Accessible safety switches including emergency shut-off, battery disconnect and travel alarm.

Positioning the gas accumulators of the SENNEBOGEN Green Hybrid System at the rear of the deck add an extra measure of safety for operators.

Maxcab's maximized window area and elevating mount gives the operator an unobstructed wide-angle view of the work zone.

Intuitive joystick controls connect the operator seamlessly to the industry's most responsive hydraulic system for precise, easy handling.

Ergonomic comfort and climate control features keep operators alert, adapting to individual preferences to fight fatigue through long shifts.

Big Savings

"Green Efficiency" powers a new generation of machines that reduce operating costs through every working hour and on every lift.

All SENNEBOGEN E-Series machines are built on layers of smart engineering and system innovations aimed at doing more with less. Our "Green Efficiency" solution combines with multiple design features that utilize power more effectively to achieve **savings of up to 50%** compared to traditional diesel-fueled machines.

eGREEN

Optional electrically powered eGreen models achieve an additional 50% reduction of energy costs over diesel models, along with low noise and vibration-free operation.

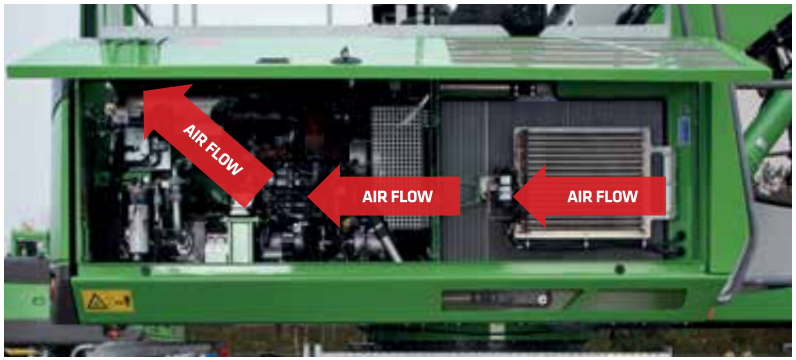

Longitudinally mounted engines provide a natural, flow-through air tunnel for efficient cooling and additional fuel economy, while adding structural strength to the upper carriage from boom pin point to counterweight.

Eco-mode engine control automatically reduces engine speed to 1800 rpm.

The large reversing fan provides up to 45% more of the cooling surface than comparable machines.

Little Footprint

Green Hybrid technology: the industry's new standard for eco-friendly material handling.

By utilizing power more efficiently, the 855 will outlift larger conventional machines while it consumes **30% less energy** and reduces emissions.

- Vertical boom movements generate potential energy
- Recovery cylinder captures energy in gas accumulators
- Released energy supports the boom through the next lift cycle

EXPERIENCE THE SYSTEM

SCAN TO WATCH AN ONLINE VIDEO DEMONSTRATION

Green Hybrid achieves high productivity, fast cycle times and high lift capacities without adding complexity to the machine. The energy recovery system is fully engineered with standard hydraulic components requiring no "black box" controls.

Attention To Details Makes Us Stronger

Strong-and-smart SENNEBOGEN machines stand up to your toughest and grittiest work environments.

Reliability and durability are engineered into the details of your 855, from heavy-duty structural components to natural flow-through engine cooling. Each of SENNEBOGEN's manufacturing, fabrication and assembly facilities is ISO-certified to deliver the same outstanding quality in every machine, every time.

By going to work every day, and staying on the job year after year, your 855 is built to deliver the best return on your equipment investment.

Dual motors extend swing system life while improving cycle times and torque.

The swing bearing is equipped with automatic lubrication to withstand extreme 360° duty cycle operation.

A continuous flange ring reduces stress and improves distribution of swing loads to the undercarriage.

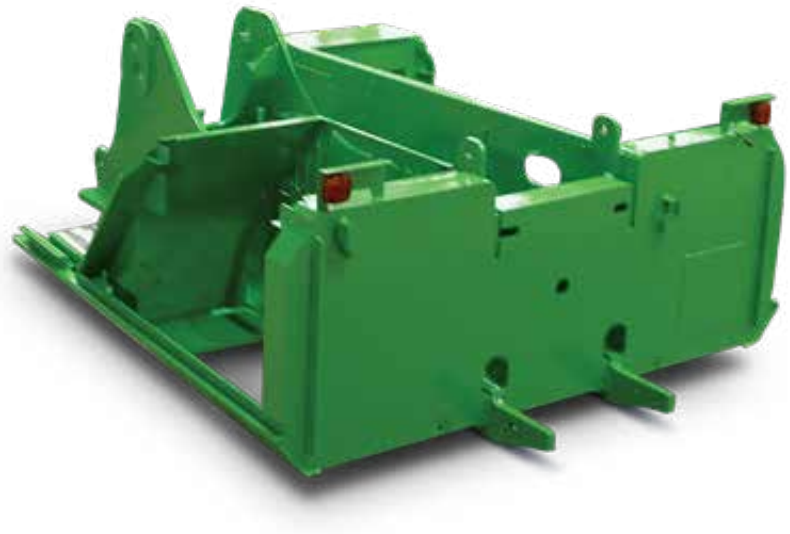

The upper carriage is built around a large, continuous one-piece center frame for added structural strength and improved air flow.

Fully hydraulic controls require no special software to troubleshoot and all test ports are easily accessible in one place.

Fabricating booms and sticks in our own shops lets SENNEBOGEN eliminate welding stresses inside the box structure and maximize service life.

Built on SENNEBOGEN's renowned expertise with intelligent hydraulics, the 855 and its Green Hybrid system minimize the need for delicate electronics and computers, preventing their related failures and the associated downtime in harsh environments

Low-vibration engine mounting reduces wear on components and lowers sound levels.

Proven Uptime

To find out how to make SENNEBOGEN machines easier to maintain than any other material handler, we ask the experts…

… we talk to the technicians who actually service our equipment.

Our own support team, our instructors, our dealers and customers are all in constant contact to troubleshoot problems and find permanent solutions. Even our senior management and the Sennebogen family take a hands-on approach to product improvement, meeting customer mechanics and operators in their own shops and yards.

Their innovative ideas help us to deliver machines that spend more time on the job, and less time in the shop.

SENNEBOGEN Uptime Kits, matched to specific service tasks and machines. Hundred of assorted parts, connectors, fittings, electrical components are easy to locate and access.

In the shop or in the field, these fully stocked kits bring together all the parts and material required for a specific service need, conveniently sorted and organized in one place.

With no bypass in the fluid circuit, SENNEBOGEN's HydroClean system continuously protects hydraulic components with industry-leading 3-micron oil filtration.

Solid steel top-opening compartment access doors on the sides, top of the upper deck and above the engine compartment maintain a secure fit, even after repeated opening for service access.

Automatic central lubrication, standard on all SENNEBOGEN machines, saves servicing time every day while improving component lifecycles

SENCON

The advanced SENCON diagnostic and reporting system presents a multi-colored user-friendly interface, now available in multiple languages.

All the fuses and relays are in a centrally located box for easy access.

Test and service points are conveniently arranged together behind the cab and within reach from ground level.

Simple hydraulic controls replace complex electronics, so the 855 requires no special software or "black box" components to troubleshoot your machine.

Our Commitment To Your Business

SENNEBOGEN's investment in service support is unmatched in the industry, providing the capabilities and resources to build success for our customers.

- Our headquarters in Stanley, NC is a 100,000 sq. ft. (9,300 m^2) multi-purpose facility dedicated to supporting SENNEBOGEN material handlers throughout the Americas.
- Our coast-to-coast network of factory-trained distributors and technicians sets the industry standard for outstanding field service.
- SENNEBOGEN application specialists provide customers and dealer sales staff with expert insight into the unique challenges.
- Our in-house engineering services respond quickly to customer needs for unique solutions.

Our large parts warehouse maintains inventories of service parts and replacement components for all of our fielded machines, from O-rings to engines, axles and complete boom and stick assemblies.

Training Center of Excellence

The dedicated Training Center in our North American head office complex provides primary and advanced courses. Offered free of charge for our dealers and their customers, the Training Center has working units, demonstration modules and is staffed with professional trainers each with many years of in-field experience and hands-on knowledge.

Visit us online at
www.sennebogen-na.com/training

Purpose-built for America's Best-Trained Technicians

The main demonstration bay allows hands-on access to machines while the meeting rooms and classrooms are all equipped with the technology required for today's interactive instruction methods.

Truly a Center for developing excellence in service and support for dealer and customer personnel, the SENNEBOGEN Training Center has earned accolades for the quality of the instructors, facilities and materials.

5 Day Course

Service Level 1

Min 6 / Max 10 Students per class

Required: Basic Technical Knowledge

Course Content:

- Machine Safety, Operation & Functions
- Preventive Maintenance
- Read & Understand Hydraulic Schematics
- Read & Understand Electric Schematics
- Basic Trouble Shooting:
  Magnet System, Hydraulics, Electrics

Offered in English and Spanish sessions

Course fees: No charge to SENNEBOGEN dealers, staff and customers.

ALL TRAINING COURSES AVAILABLE FREE

Service Level 1
Service Level 2
Parts Training
Operator Familiarization

5 Day Course

Service Level 2

Min 4 / Max 6 Students per class

Required: Completion of Level 1 Class

Course Content:

- Remote Trouble Shooting
- Component Training & Repair
- Failure Analysis
- In-Depth Trouble Shooting
  Magnet System, Hydraulics, Electrics

Offered in English and Spanish sessions

Course fees: No charge to SENNEBOGEN dealers, staff and customers.

Level 2 classes are smaller & more intensive & build on Level 1.

Purpose-Built Facilities

With nearly 1,000,000 sq. ft. (93,000 m^2) of production space in our four manufacturing facilities in Europe, every step of production at SENNEBOGEN is planned to serve individual customer needs. Every critical component and process is completed in-house to assure quality, efficiency and flexibility on the production line.

- We fabricate our own booms and sticks
- Our line-up is based on a full line of interchangeable platforms
- Our plants are designed to customize each machine, built-to-order
- Your machine is fully inspected and live-tested before it leaves the factory

Our four factories in Europe support the full range of capabilities for SENNEBOGEN to machine, fabricate and assemble all major components to our own standards, in-house.

(Pictured here is our main plant in Straubing, Germany)

Modular components used across multiple products allow SENNEBOGEN to deliver purpose-built machines competitively. Shared systems also streamline aftersale parts inventories for customers and their local SENNEBOGEN distributors.

Every configuration of a SENNEBOGEN begins as an identical machine up until the final stage of assembly. The unit is then mounted on your choice of undercarriage or platform, and completed with your preferred equipment and choice of cab.

The Right Tools For Every Job Ensures Maximum Uptime

Keep your 855 E "purpose-built" from end to end with your choice of genuine SENNEBOGEN attachments.

SENNEBOGEN grapples and lifting magnets are all heavy-duty production-rated tools, built to SENNEBOGEN's exacting standards for reliable, efficient service. Specified to match the fittings and power ratings for your SENNEBOGEN material handler, these attachments ensure that you always get the most productivity from your machine.

Available only from your authorized SENNEBOGEN dealer, *green machine* attachments qualify as part of your total SENNEBOGEN Capital financing package.

Orange Peel **Grapples**

Built to grab and hold large loads efficiently, with easy handling and reliable service

- Rotator design with 360° rotation
- 4-tine and 5-tine scrap grapples from .5 to 5.0 cu. yd.

Lifting **Magnets**

Made-in-America magnets engineered to operate 24/7 with consistent lifting strength throughout every working shift

- Deep field and extra deep field models with aluminum or copper coils
- All common sizes from 30" to 72" (762 mm to 1,828 mm)

Waste **Grapples**

Extra wide jaw and elongated head structure to grab large loads in transfer stations and wood waste handling

- Heavy-duty 5,000 PSI hydraulic cylinders
- Load capacity 0.4 and 0.6 yard

Mag **Grapples**

Combination 4-tine grapple and magnet to sort and separate scrap metals from mixed loads and debris

- 360° rotation; designed for both high radial and axial loads
- Grapples from .75 to 1.5 cu. yd. with magnets from 30" to 44" (762 mm to 1,118 mm) diameter

SPECIFICATIONS INDEX

855 M "E"

855 R-HD "E"


SENNEBOGEN
855E
855E

Technical Specifications - 855 M "E"

ENGINE	
model	Cummins QSM11-C360, Tier 4F
type	in-line, 6 cylinder, cooled exhaust gas recirculation, water cooled
emission	EPA Tier 4F
net power	318 HP (237 kW) @ 2,000 rpm
injection	high pressure common-rail
fuel tank	264 gal (1000 L)
air filtration	direct flow filtration system dual stage filter with pre-filter
control	integrated ECM automatic idle - stop automatic eco mode

HYDRAULIC SYSTEM	
system type	loading sensing pilot pressure controlled open center
pump type	variable-displacement axial-piston pump
max. pump flow	196 gpm (740 l / m)
max. pressure	5,076 psi (350 bar)
hydraulic tank	238 gal (900 L)
hydraulic system	304 gal (1150 L)
filtration	dual filtration system 3 micron (HydroClean)

COOLING	
cooling type	cool-on-demand, suction-type fan system, side by side
hydraulic / water	hydraulic fan drive axial piston pump, reversible fan thermostatically controlled, closed loop system
charge air	direct fan drive

ELECTRICAL	
alternator	24 V
starter	24 V
battery	2 x 12 V
lights	2 x cab roof, type halogen 2 x frame upper carriage, type H4

SWING SYSTEM	
swing speed	0 - 6 rpm
swing hydraulic	closed loop
drive	2 x axial piston motor driving planetary gearbox, integrated brake valves
swing brake	multidisc brake, spring loaded
swing bearing	external teeth, sealed ball bearing

UPPER CARRIAGE	
design	torsion-free upper frame with continuous bearing-plates for optimal power introduction, precision pivot; excellent design; very low noise emission

TRAVEL / UNDERCARRIAGE	
type	rubber tired MP71E
drive	all-wheel drive powered by a variable-displacement hydraulic motor with direct-mounted, automatic brake valve and 2-gear power shift transmission planetary axles with integrated steering cylinder and dual-circuit service brake
speed	0-7.5 mph (0-12 kph)
tires	8 x 14.00-24 (solid rubber)
parking brake	spring-loaded multi-disk brake
steering	joystick steering
safety	travel alarm

REFILL CAPACITIES	
fuel tank	264 gal (1000 L)
engine cooling system	15.85 gal (60 L)
engine oil w / filter	7.24 gal (27.4 L)
hydraulic tank	230 gal (870 L)
hydraulic system	180 gal (680 L)
swing box	1.45 gal (5.5 L)
axle hub (front axle)	1.24 gal (4.7 L) each
axle hub (rear axle)	1.24 gal (4.7 L) each
axle differential (front axle)	11.76 gal (44.5 L)
axle differential (rear axle)	10.65 gal (40.3 L)
axle drop box (front axle)	0.4 gal (1.5 L)
axle drop box (rear axle)	0.4 gal (1.5 L)
parking brake	0.16 gal (0.6 L)
swing ring lubrication reservoir	0.26 gal (1.0 L)
central lubrication reservoir	8.8 lb (4 kg)
diesel exhaust fluid	26.4 gal (100 L)

WEIGHT	
operating weight	169,756 lb (77,000 kg)

MAGNET SYSTEM	
rating	25 kW
voltage (magnetized)	230 V
controller	Hubbell
generator	Baldor
drive	hydraulic

Subject to technical modification.

Dimensions - 855 M “E”

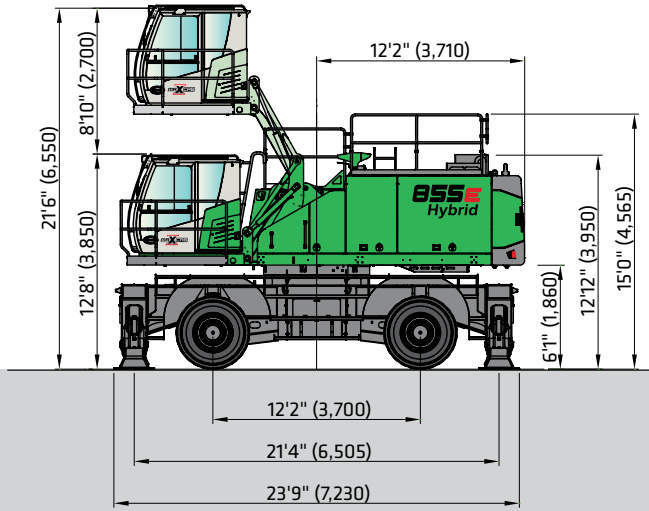

855 M with MP71 undercarriage and Maxcab E270 cab with hydraulic elevation feature

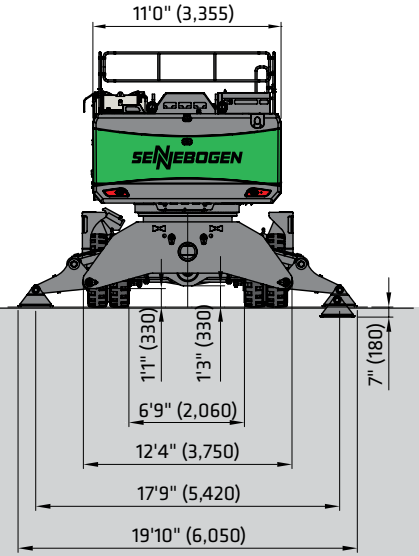

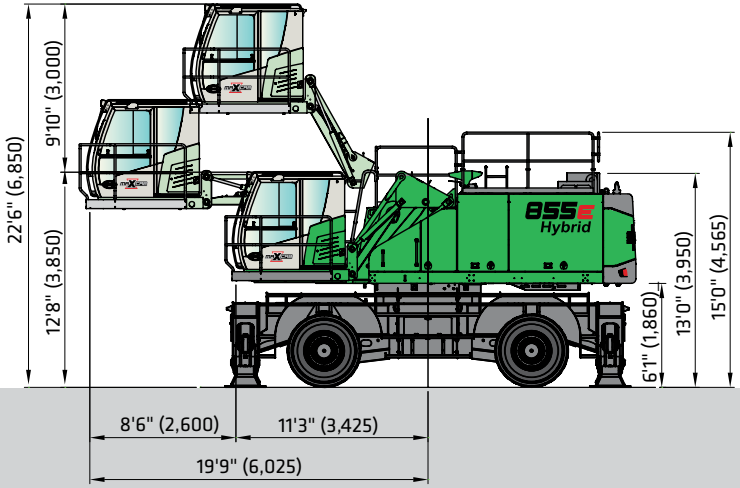

855 M with MP71 undercarriage Maxcab E300/260 cab with hydraulic elevation

Transport Dimensions - 855 M “E”

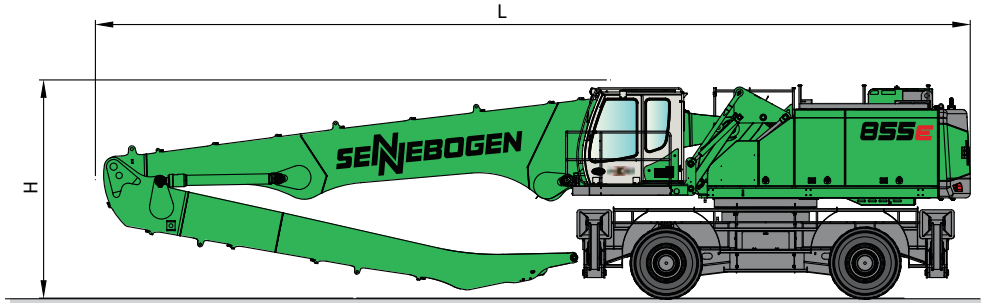

Reach	Boom Length	Stick Length	Transport length (L)	Transport height (H)
K17	34'5" (10.5 m)	24'7" (7.5 m)	50'2" (15.3 m)	13'1" (4.0 m)
K18	36'9" (11.2 m)	24'7" (7.5 m)	52' (15.8 m)	13'1" (4.0 m)
K19	36'9" (11.2 m)	27'11" (8.5 m)	52'6" (16.0 m)	13'1" (4.0 m)
K21	39'8" (12.1 m)	31'2" (9.5 m)	55'5" (16.9 m)	13'1" (4.0 m)
B19	39'4" (12.0 m) Banana	27'11" (8.5 m)	54'5" (16.6 m)	13'1" (4.0 m)
B20	39'4" (12.0 m) Banana	31'2" (9.5 m)	54'2" (16.5 m)	13'1" (4.0 m)*

Subject to technical modification.

*Stick removed.

Lift Capacities - 855 M “E”

Working Equipment K17

Reach	55'9" (17.0 m)
Boom	34'5" (10.5 m)
Stick	24'7" (7.5 m)

Operator’s Cab

Model	E270 Maxcab hydraulic elevating
Eye level	approx. 19'9" (6.1 m)

Undercarriage

Model	MP71 4-point outriggers
Tires	8 x 14.00-24 solid rubber

Lift capacities are stated in pounds. Values in brackets [ ] are stated in metric tons. Indicated figures are based on ISO 10567 and do not exceed 75% or tipping and 87% of hydraulic capacity and machine standing on firm, level supporting surface. Loads are valid for 360° with machine support on outriggers. Lifting capacities do not include working equipment such as orange peel grapples, magnets, clamshells, etc. The load point is the center line of the attachment pivot mounting pin on the stick. Their weights must be deducted from the numbers indicated in the lifting charts. Please contact SENNEBOGEN or your local dealer for optimum attachment selection. The operator / user of the machine should be fully acquainted with the operator’s & safety manual provided by Sennebogen. Capacities apply only to the machine as originally manufactured and equipped by SENNEBOGEN.

K17

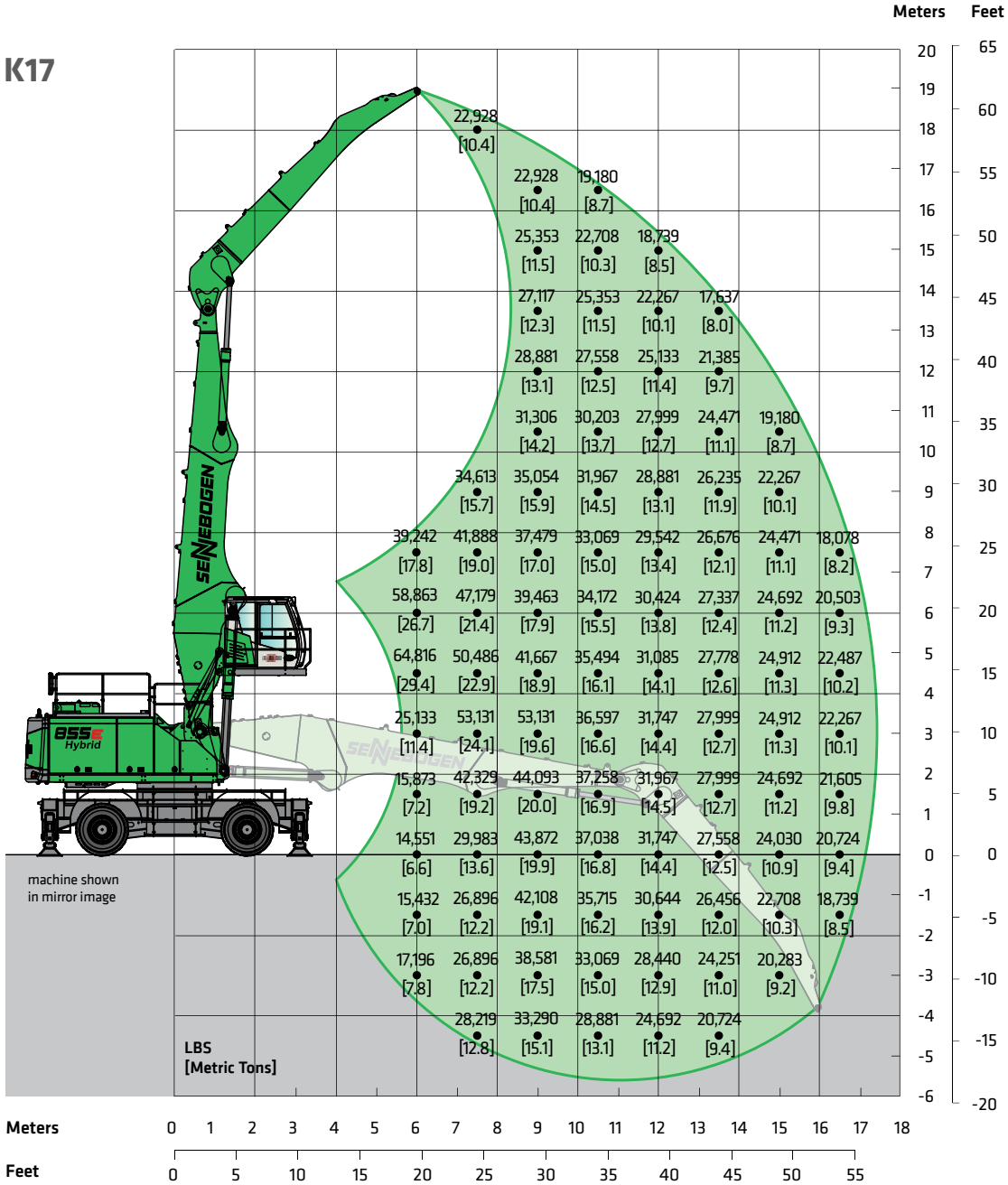

Lift Capacities - 855 M “E”

Working Equipment K18

Reach	59'1" (18.0 m)
Boom	36'9" (11.2 m)
Stick	24'7" (7.5 m)

Operator’s Cab

Model	E270 Maxcab hydraulic elevating
Eye level	approx. 19'9" (6.1 m)

Undercarriage

Model	MP71 4-point outriggers
Tires	8 x 14.00-24 solid rubber

Lift capacities are stated in pounds. Values in brackets [ ] are stated in metric tons. Indicated figures are based on ISO 10567 and do not exceed 75% or tipping and 87% of hydraulic capacity and machine standing on firm, level supporting surface. Loads are valid for 360° with machine support on outriggers. Lifting capacities do not include working equipment such as orange peel grapples, magnets, clamshells, etc. The load point is the center line of the attachment pivot mounting pin on the stick. Their weights must be deducted from the numbers indicated in the lifting charts. Please contact SENNEBOGEN or your local dealer for optimum attachment selection. The operator / user of the machine should be fully acquainted with the operator’s & safety manual provided by Sennebogen. Capacities apply only to the machine as originally manufactured and equipped by SENNEBOGEN.

K18

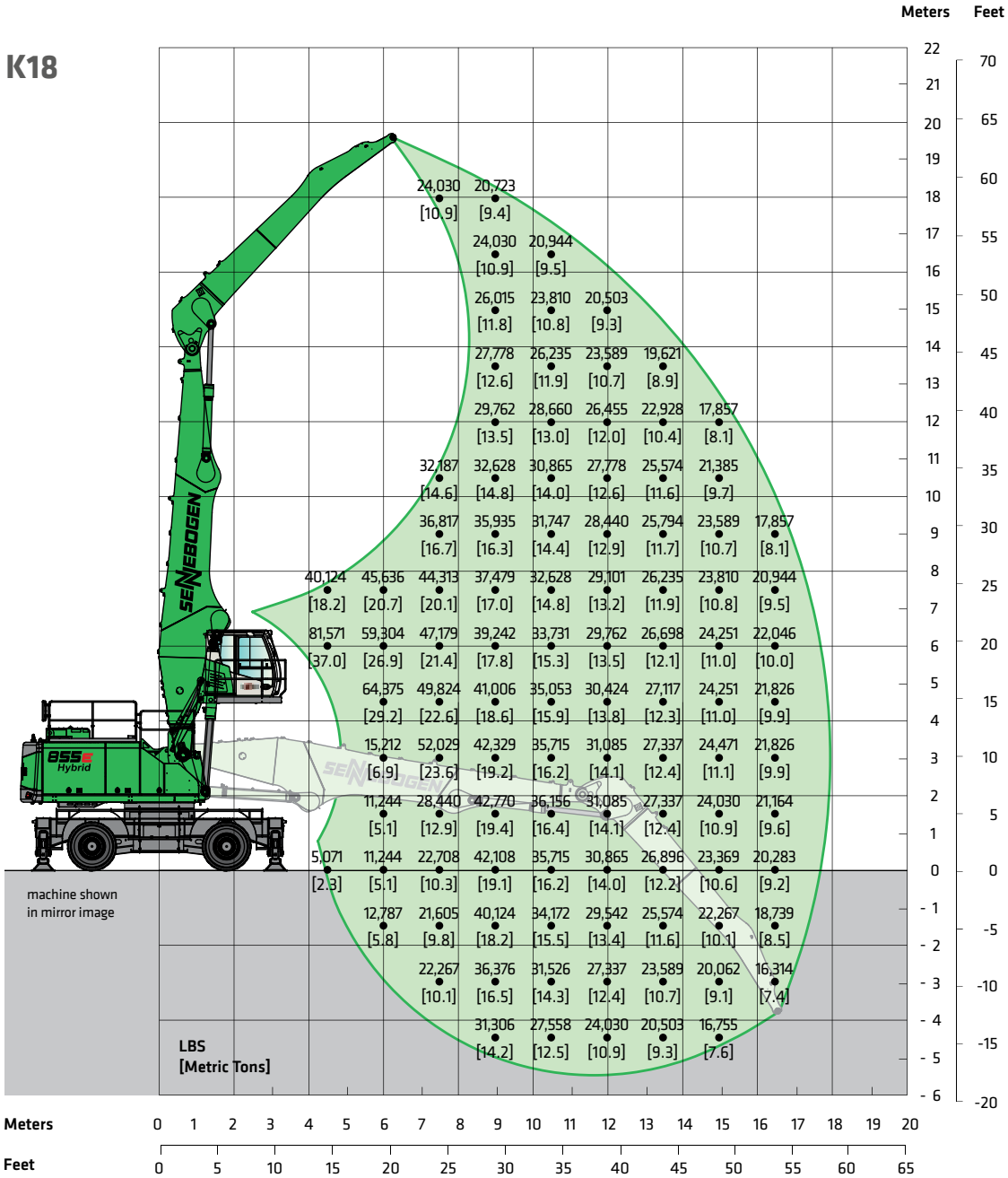

Lift Capacities - 855 M “E”

Working Equipment K19

Reach	62'4" (19.0 m)
Boom	36'9" (11.2 m)
Stick	27'11" (8.5 m)

Operator’s Cab

Model	E270 Maxcab hydraulic elevating
Eye level	approx. 19'9" (6.1 m)

Undercarriage

Model	MP71 4-point outriggers
Tires	8 x 14.00-24 solid rubber

Lift capacities are stated in pounds. Values in brackets [ ] are stated in metric tons. Indicated figures are based on ISO 10567 and do not exceed 75% or tipping and 87% of hydraulic capacity and machine standing on firm, level supporting surface. Loads are valid for 360° with machine support on outriggers. Lifting capacities do not include working equipment such as orange peel grapples, magnets, clamshells, etc. The load point is the center line of the attachment pivot mounting pin on the stick. Their weights must be deducted from the numbers indicated in the lifting charts. Please contact SENNEBOGEN or your local dealer for optimum attachment selection. The operator / user of the machine should be fully acquainted with the operator’s & safety manual provided by Sennebogen. Capacities apply only to the machine as originally manufactured and equipped by SENNEBOGEN.

K19

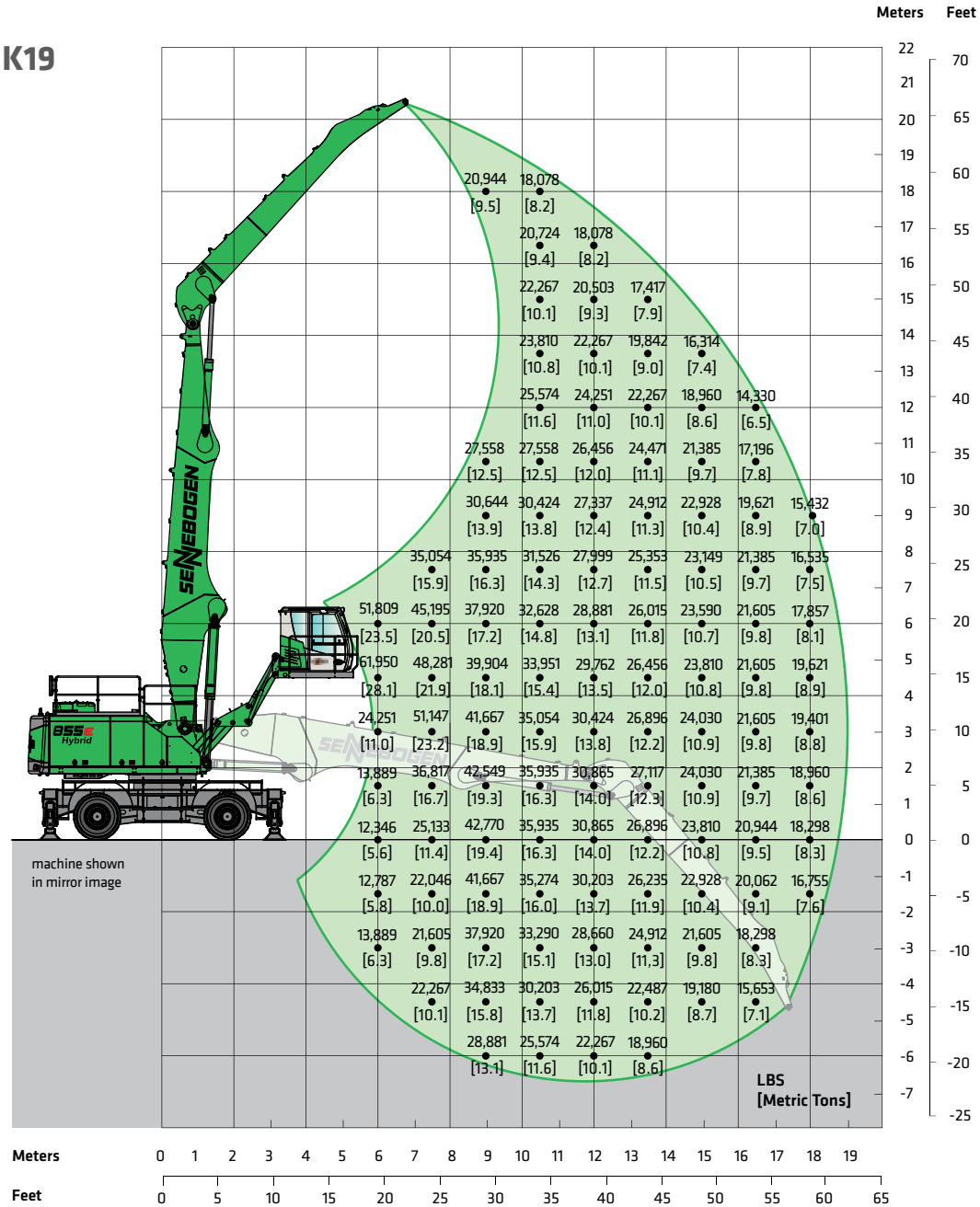

Lift Capacities - 855 M “E”

Working Equipment K21

Reach	68'10" (21.0 m)
Boom	39'7" (12.1 m)
Stick	31'2" (9.5 m)

Operator’s Cab

Model	E270 Maxcab hydraulic elevating
Eye level	approx. 19'9" (6.1 m)

Undercarriage

Model	MP71 4-point outriggers
Tires	8 x 14.00-24 solid rubber

Lift capacities are stated in pounds. Values in brackets [ ] are stated in metric tons. Indicated figures are based on ISO 10567 and do not exceed 75% or tipping and 87% of hydraulic capacity and machine standing on firm, level supporting surface. Loads are valid for 360° with machine support on outriggers. Lifting capacities do not include working equipment such as orange peel grapples, magnets, clamshells, etc. The load point is the center line of the attachment pivot mounting pin on the stick. Their weights must be deducted from the numbers indicated in the lifting charts. Please contact SENNEBOGEN or your local dealer for optimum attachment selection. The operator / user of the machine should be fully acquainted with the operator’s & safety manual provided by Sennebogen. Capacities apply only to the machine as originally manufactured and equipped by SENNEBOGEN.

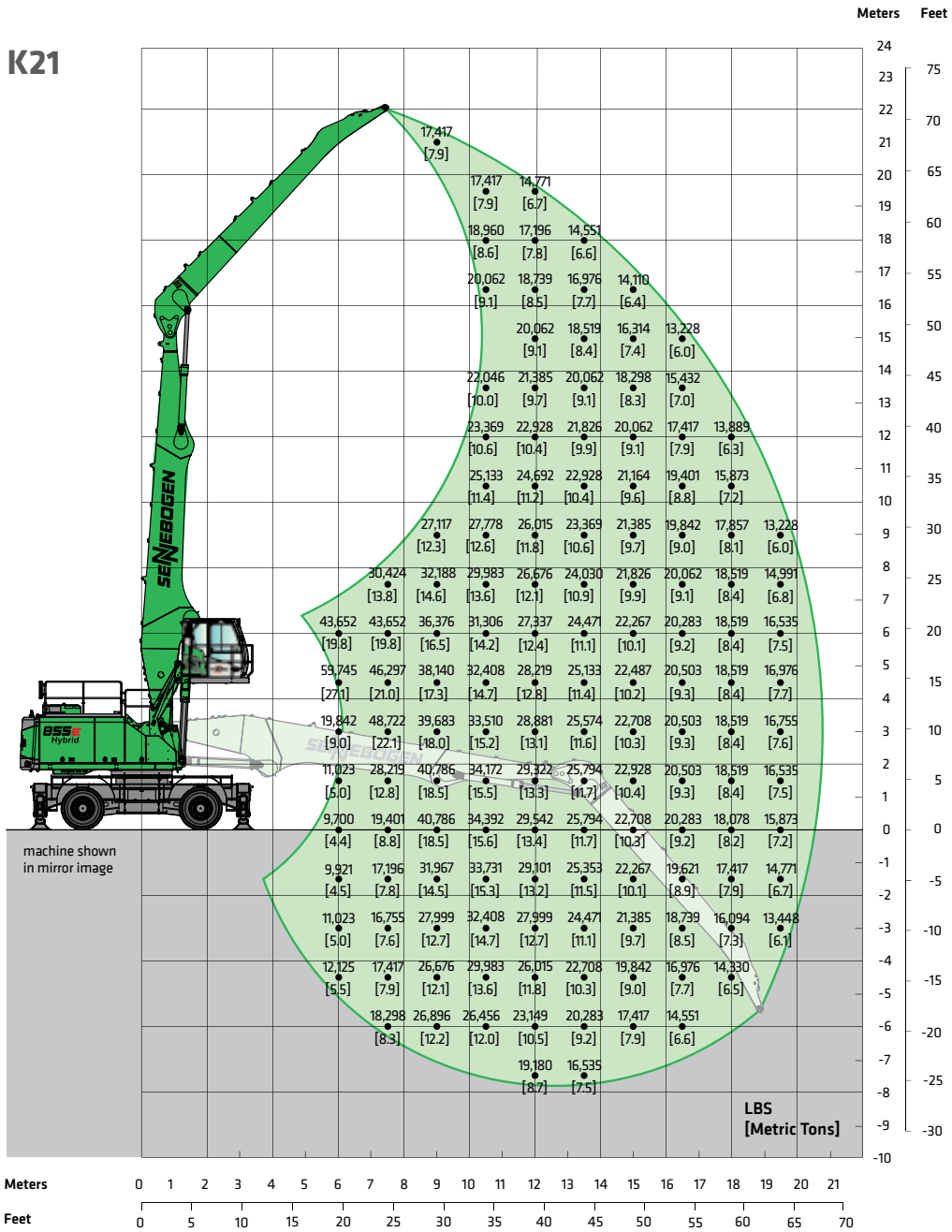

Lift Capacities - 855 M “E”

Working Equipment B19

Reach	62'4" (19.0 m)
Boom	39'4" (12.0 m) Banana
Stick	27'11" (8.5 m)

Operator’s Cab

Model	E270 Maxcab (optional) hydraulic elevating/ forward moving
Eye level	approx. 20'11" (6.1 m)

Undercarriage

Model	MP71 4-point outriggers
Tires	8 x 14.00-24 solid rubber

Lift capacities are stated in pounds. Values in brackets [ ] are stated in metric tons. Indicated figures are based on ISO 10567 and do not exceed 75% or tipping and 87% of hydraulic capacity and machine standing on firm, level supporting surface. Loads are valid for 360° with machine support on outriggers. Lifting capacities do not include working equipment such as orange peel grapples, magnets, clamshells, etc. The load point is the center line of the attachment pivot mounting pin on the stick. Their weights must be deducted from the numbers indicated in the lifting charts. Please contact SENNEBOGEN or your local dealer for optimum attachment selection. The operator / user of the machine should be fully acquainted with the operator’s & safety manual provided by Sennebogen. Capacities apply only to the machine as originally manufactured and equipped by SENNEBOGEN.

B19

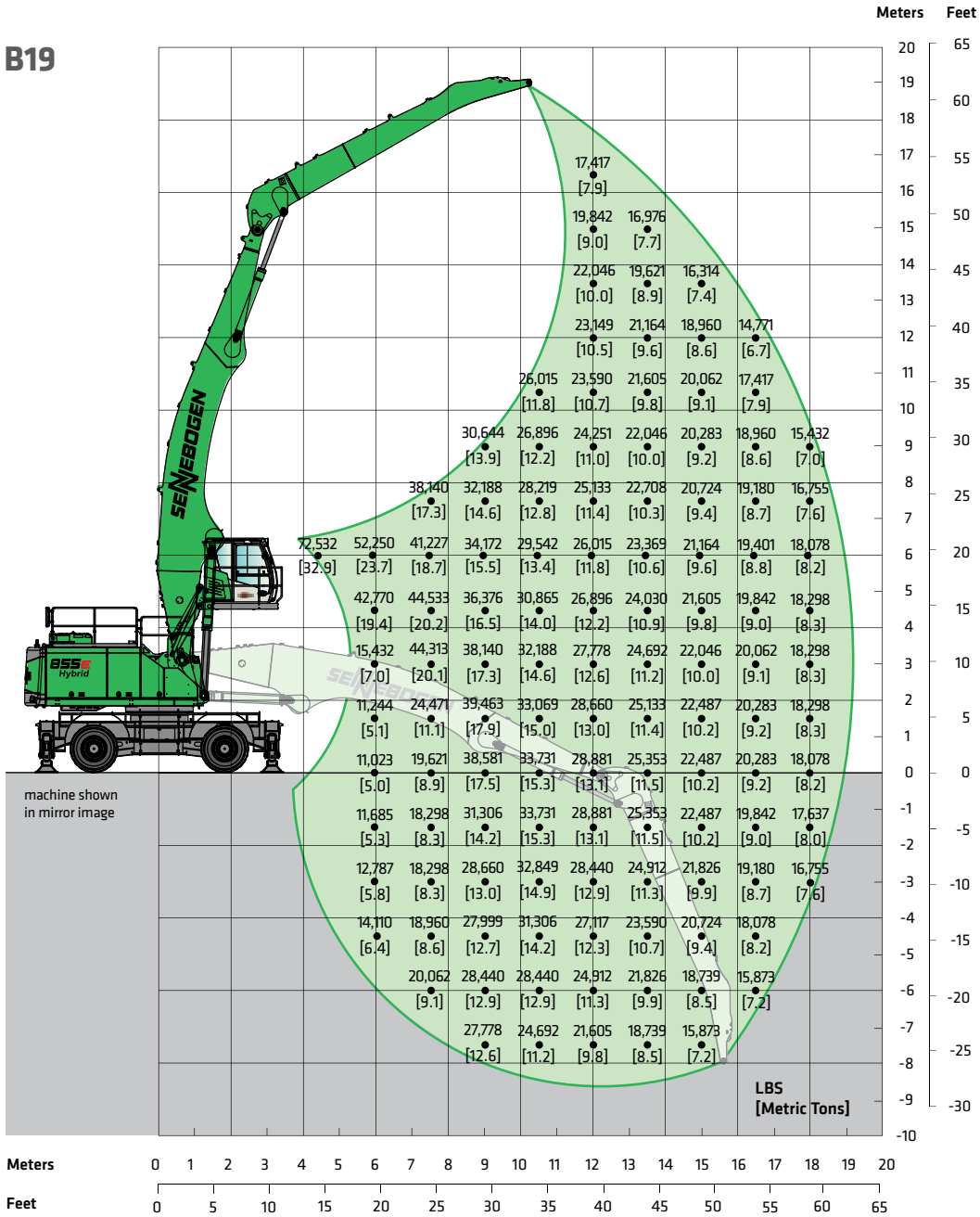

Lift Capacities - 855 M “E”

Working Equipment B20

Reach	65'7" (20.0 m)
Boom	39'4" (12.0 m) Banana
Stick	31'2" (9.5 m)

Operator’s Cab

Model	E270 Maxcab (optional) hydraulic elevating/ forward moving
Eye level	approx. 20'11" (6.1 m)

Undercarriage

Model	MP71 4-point outriggers
Tires	8 x 14.00-24 solid rubber

Lift capacities are stated in pounds. Values in brackets [ ] are stated in metric tons. Indicated figures are based on ISO 10567 and do not exceed 75% or tipping and 87% of hydraulic capacity and machine standing on firm, level supporting surface. Loads are valid for 360° with machine support on outriggers. Lifting capacities do not include working equipment such as orange peel grapples, magnets, clamshells, etc. The load point is the center line of the attachment pivot mounting pin on the stick. Their weights must be deducted from the numbers indicated in the lifting charts. Please contact SENNEBOGEN or your local dealer for optimum attachment selection. The operator / user of the machine should be fully acquainted with the operator’s & safety manual provided by Sennebogen. Capacities apply only to the machine as originally manufactured and equipped by SENNEBOGEN.

B20

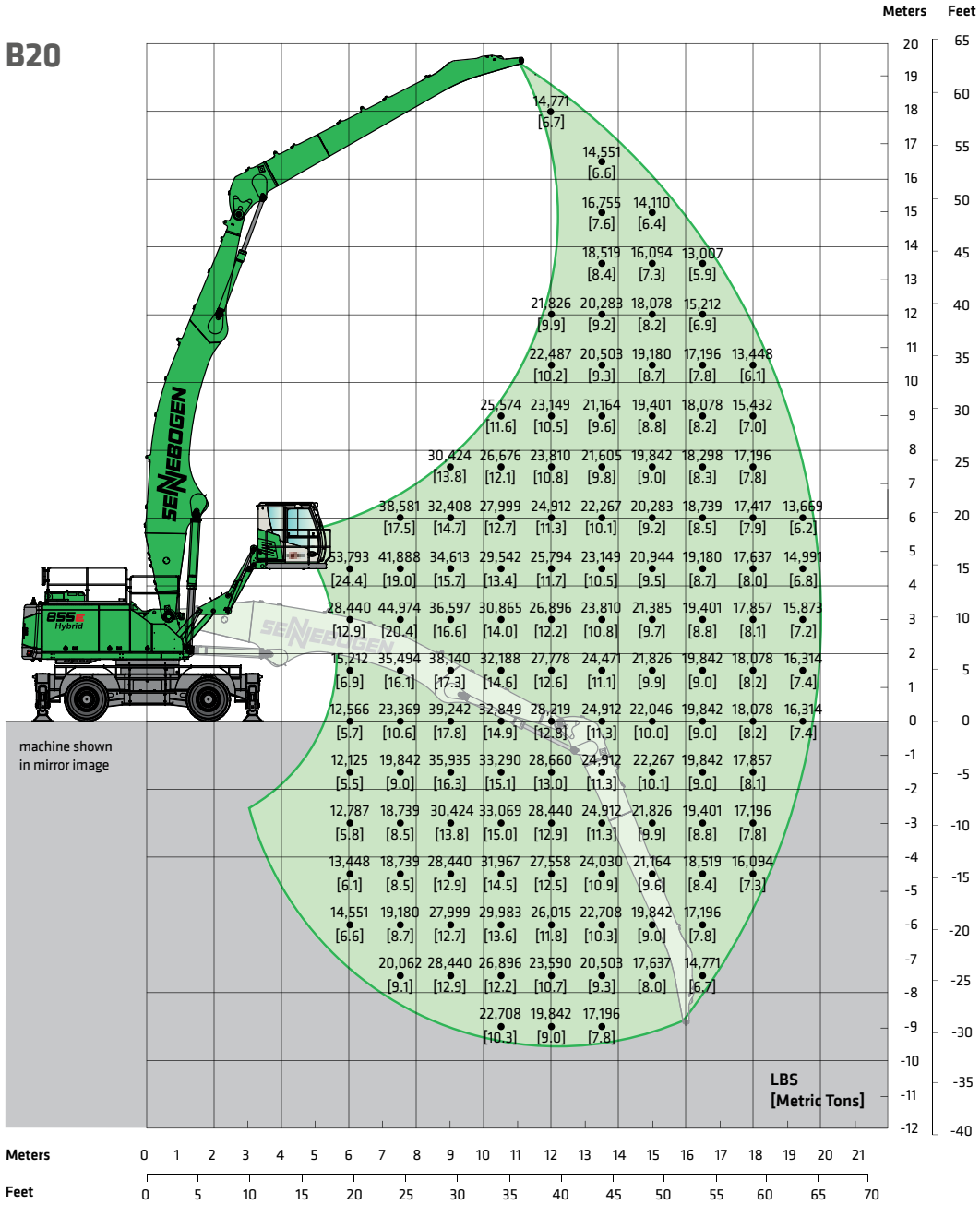

Technical Specifications - 855 R-HD "E"

ENGINE	
model	Cummins QSM11-C360, Tier 4F
type	in-line, 6 cylinder, cooled exhaust gas recirculation, water cooled
emission	EPA Tier 4F
net power	318 HP (237 kW) @ 2,000 rpm
injection	high pressure common-rail
fuel tank	264 gal (1000 L)
air filtration	direct flow filtration system dual stage filter with pre-filter
control	integrated ECM automatic idle - stop automatic eco mode

HYDRAULIC SYSTEM	
system type	loading sensing pilot pressure controlled open center
pump type	variable-displacement axial-piston pump
max. pump flow	196 gpm (740 l / m)
max. pressure	5,076 psi (350 bar)
hydraulic tank	238 gal (900 L)
hydraulic system	304 gal (1150 L)
filtration	dual filtration system 3 micron (HydroClean)

COOLING	
cooling type	cool-on-demand, suction-type fan system, side by side
hydraulic / water	hydraulic fan drive axial piston pump, reversible fan thermostatically controlled, closed loop system
charge air	direct fan drive

ELECTRICAL	
alternator	24 V
starter	24 V
battery	2 x 12 V
lights	2 x cab roof, type halogen 2 x frame upper carriage, type H4

SWING SYSTEM	
swing speed	0 - 6 rpm
swing hydraulic	closed loop
drive	2 x axial piston motor driving planetary gearbox, integrated brake valves
swing brake	multidisc brake, spring loaded
swing bearing	external teeth, sealed ball bearing

UPPER CARRIAGE	
design	torsion-free upper frame with continuous bearing-plates for optimal power introduction, precision pivot; excellent design; very low noise emission

TRAVEL / UNDERCARRIAGE	
type	crawler R83-450
system	mechanical, extendable tracks
drive	independent driven by an axial piston motor through a compact planetary
travel speed	stage I - 0-0.99 mph (0-1.6 km/h) stage II - 0-1.86 mph (0-3.0 km/h)
shoes	triple grouser, 31.5" (800 mm)
crawler	B7 maintenance free tracks
steering	joystick steering
safety	travel alarm

REFILL CAPACITIES	
fuel tank	264 gal (1000 L)
engine cooling system	15.85 gal (60 L)
engine oil w / filter	7.24 gal (27.4 L)
hydraulic tank	230 gal (870 L)
hydraulic system	180 gal (680 L)
swing box	1.45 gal (5.5 L)
parking brake	0.16 gal (0.6 L)
swing ring lubrication reservoir	0.26 gal (1.0 L)
central lubrication reservoir	8.8 lb (4 kg)
diesel exhaust fluid	26.4 gal (100 L)

WEIGHT	
operating weight	182,984 lb (83,000 kg)

MAGNET SYSTEM	
rating	25 kW
voltage (magnetized)	230 V
controller	Hubbell
generator	Baldor
drive	hydraulic

Subject to technical modification.

Dimensions - 855 R-HD “E”

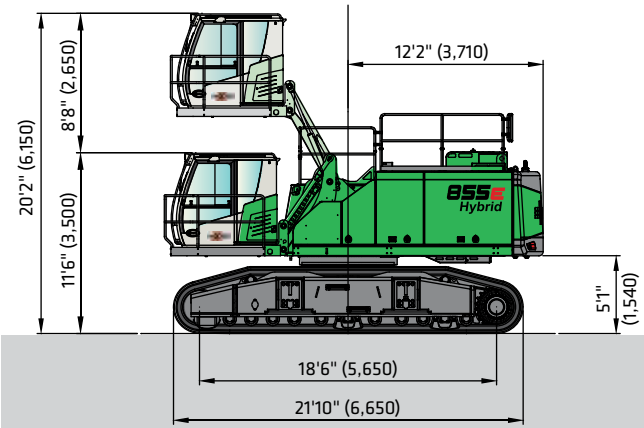

855 R-HD with R83-450 undercarriage and Maxcab E270 cab, can be elevated hydraulically

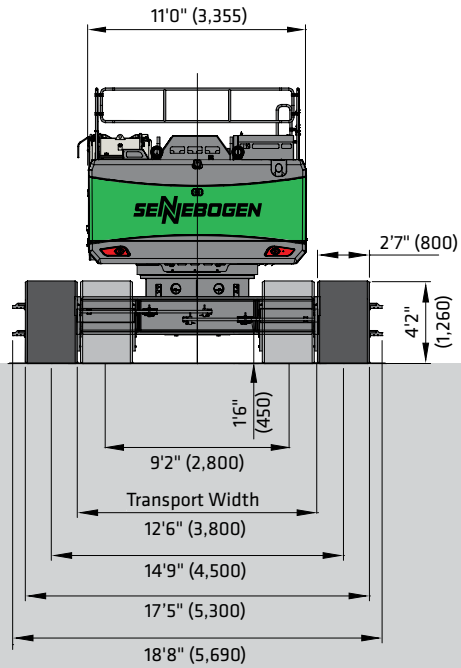

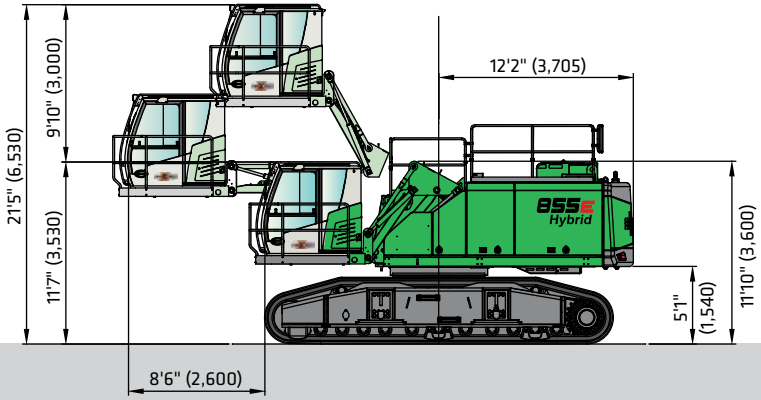

855 R-HD with R83-450 undercarriage and Maxcab E300/260 cab, can be elevated and moved forward hydraulically

Transport Dimensions - 855 R-HD “E”

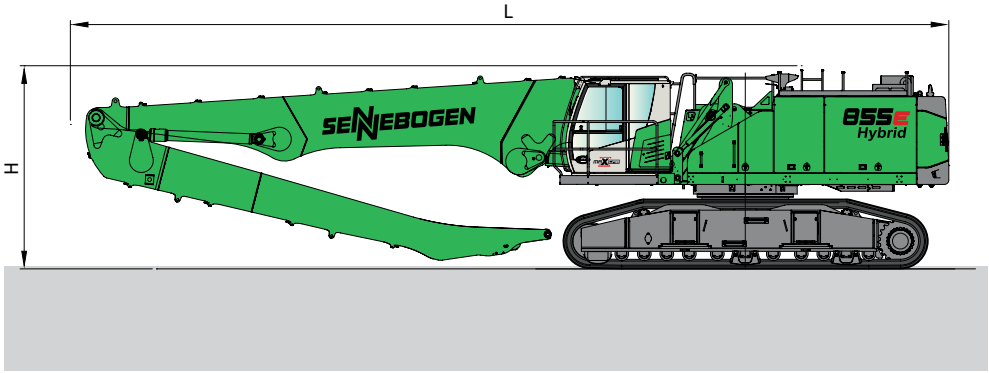

Reach	Boom Length	Stick Length	Transport length (L)	Transport height (H)
K17	34'5" (10.5 m)	24'7" (7.5 m)	50'2" (15.3 m)	12'0" (3.65 m)
K18	36'9" (11.2 m)	24'7" (7.5 m)	52'1" (15.9 m)	12'0" (3.65 m)
K19	36'9" (11.2 m)	27'11" (8.5 m)	52'6" (16.0 m)	12'2" (3.70 m)
K21	39'8" (12.1 m)	31'2" (9.5 m)	55'5" (16.9 m)	12'8" (3.85 m)
B19	39'4" (12.0 m) Banana	27'11" (8.5 m)	54'9" (16.7 m)	12'8" (3.85 m)
B20	39'4" (12.0 m) Banana	31'2" (9.5 m)	54'9" (16.7 m)	12'8" (3.85 m)

Subject to technical modification.

*Stick removed.

Lift Capacities - 855 R-HD "E"

Working Equipment K17

Reach	55'9" (17.0 m)
Boom	34'5" (10.5 m)
Stick	25'3" (7.5 m)

Operator's Cab

Model	Maxcab E270, hydraulically elevated
Eye level	approx. 19'0" (5.8 m)

Undercarriage

Model	R83-450
Tracks	B7 triple grouser shoes 31.5" (800 mm)

Lift capacities are stated in pounds. Values in brackets [ ] are stated in metric tons. Indicated figures are based on ISO 10567 and do not exceed 75% or tipping and 87% of hydraulic capacity and machine standing on firm, level supporting surface. Loads are valid for 360° with machine support on outriggers. Lifting capacities do not include working equipment such as orange peel grapples, magnets, clamshells, etc. The load point is the center line of the attachment pivot mounting pin on the stick. Their weights must be deducted from the numbers indicated in the lifting charts. Please contact SENNEBOGEN or your local dealer for optimum attachment selection. The operator / user of the machine should be fully acquainted with the operator's & safety manual provided by Sennebogen. Capacities apply only to the machine as originally manufactured and equipped by SENNEBOGEN.

K17

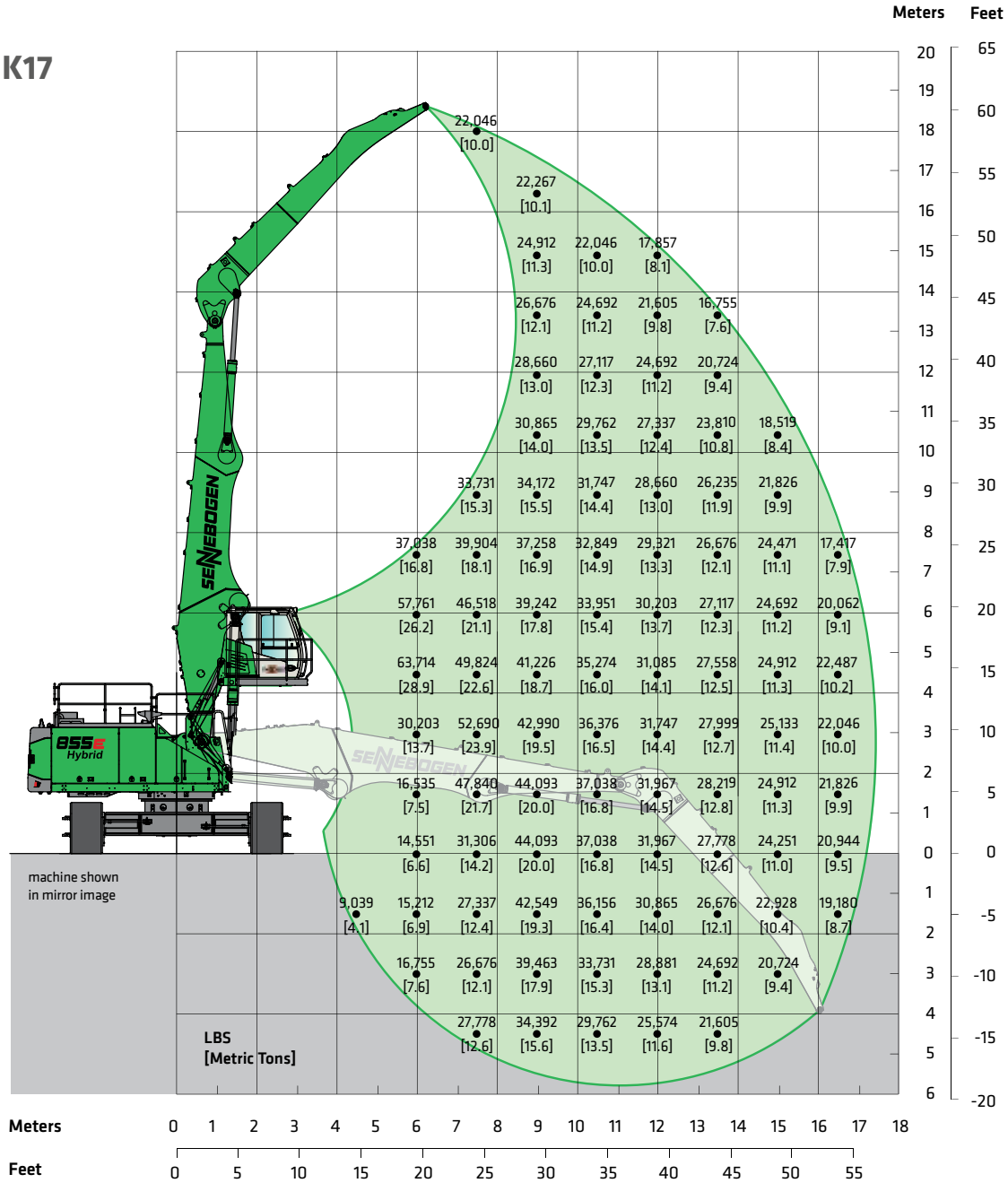

Lift Capacities - 855 R-HD “E”

Working Equipment K18

Reach	59'1" (18.0 m)
Boom	36'9" (11.2 m)
Stick	24'7" (7.5 m)

Operator’s Cab

Model	Maxcab E270, hydraulically elevated
Eye level	approx. 19'0" (5.8 m)

Undercarriage

Model	R83-450
Tracks	B7 triple grouser shoes 31.5" (800 mm)

Lift capacities are stated in pounds. Values in brackets [ ] are stated in metric tons. Indicated figures are based on ISO 10567 and do not exceed 75% or tipping and 87% of hydraulic capacity and machine standing on firm, level supporting surface. Loads are valid for 360° with machine support on outriggers. Lifting capacities do not include working equipment such as orange peel grapples, magnets, clamshells, etc. The load point is the center line of the attachment pivot mounting pin on the stick. Their weights must be deducted from the numbers indicated in the lifting charts. Please contact SENNEBOGEN or your local dealer for optimum attachment selection. The operator / user of the machine should be fully acquainted with the operator’s & safety manual provided by Sennebogen. Capacities apply only to the machine as originally manufactured and equipped by SENNEBOGEN.

K18

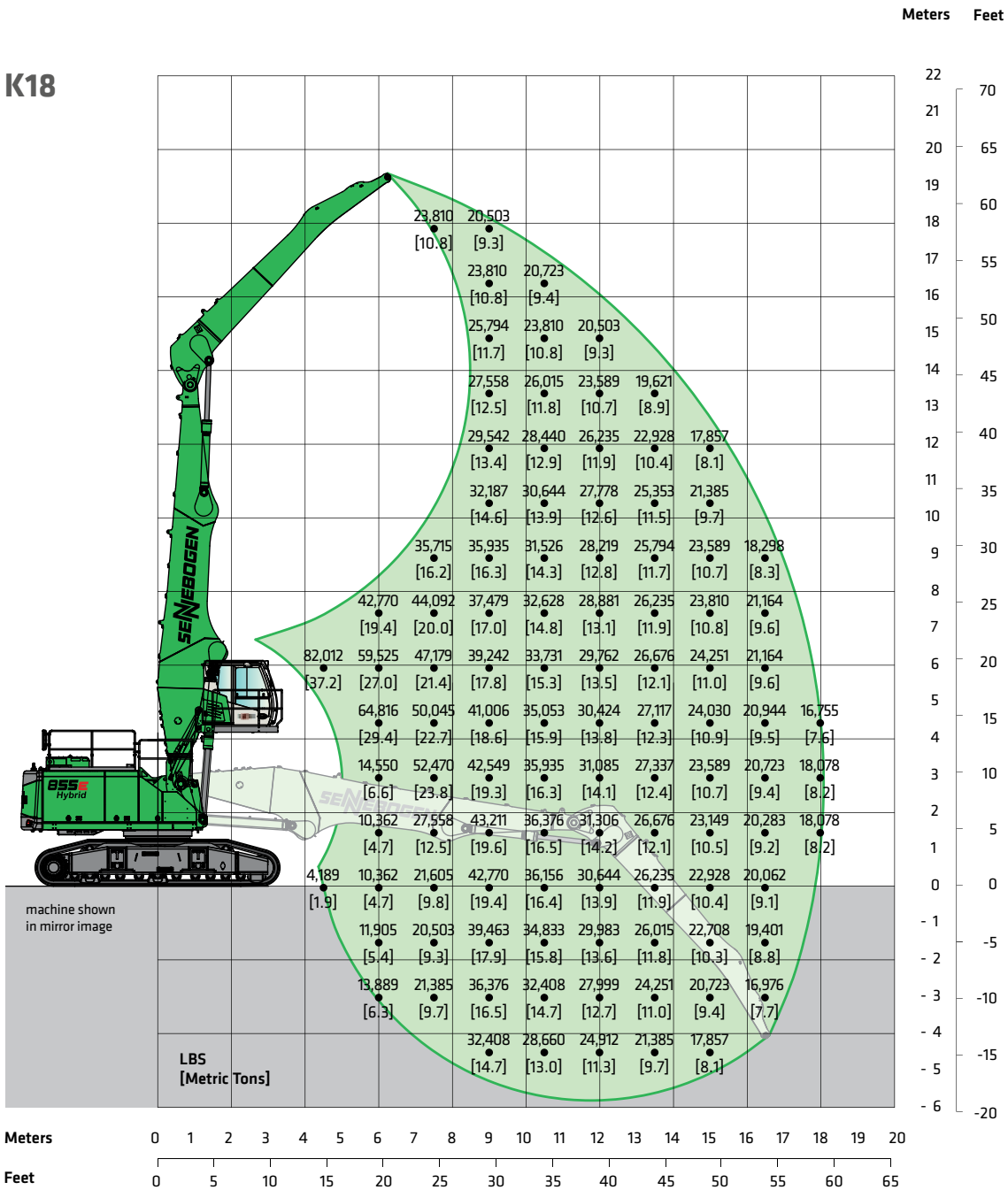

Lift Capacities - 855 R-HD “E”

Working Equipment K19

Reach	62'4" (19.0 m)
Boom	36'9" (11.2 m)
Stick	27'11" (8.5 m)

Operator’s Cab

Model	Maxcab E270, hydraulically elevated
Eye level	approx. 19'0" (5.8 m)

Undercarriage

Model	R83-450
Tracks	B7 triple grouser shoes 31.5" (800 mm)

Lift capacities are stated in pounds. Values in brackets [ ] are stated in metric tons. Indicated figures are based on ISO 10567 and do not exceed 75% or tipping and 87% of hydraulic capacity and machine standing on firm, level supporting surface. Loads are valid for 360° with machine support on outriggers. Lifting capacities do not include working equipment such as orange peel grapples, magnets, clamshells, etc. The load point is the center line of the attachment pivot mounting pin on the stick. Their weights must be deducted from the numbers indicated in the lifting charts. Please contact SENNEBOGEN or your local dealer for optimum attachment selection. The operator / user of the machine should be fully acquainted with the operator’s & safety manual provided by Sennebogen. Capacities apply only to the machine as originally manufactured and equipped by SENNEBOGEN.

K19

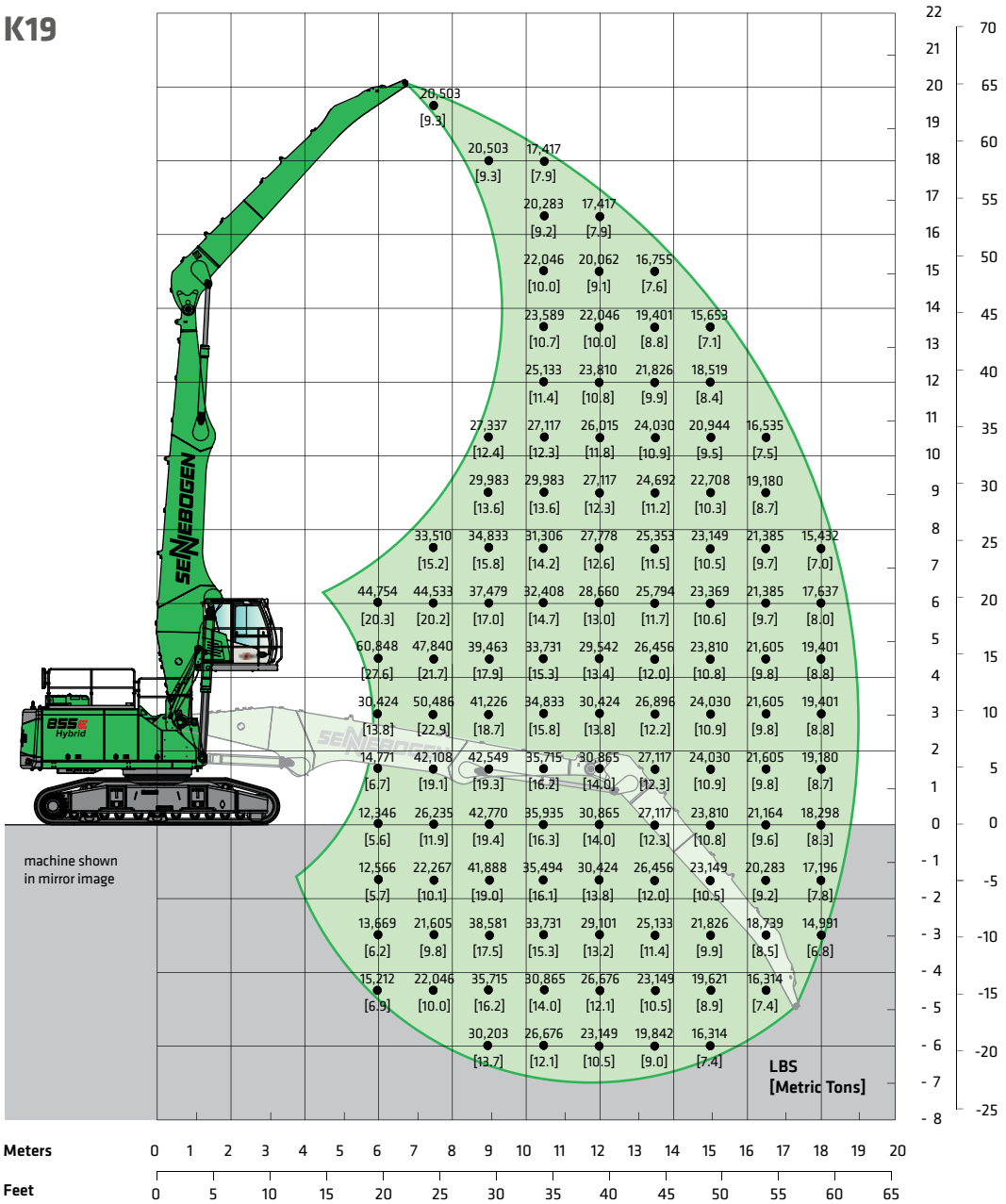

Lift Capacities - 855 R-HD “E”

Working Equipment K21

Reach	68'10" (21.0 m)
Boom	39'8" (12.1 m)
Stick	31'2" (9.5 m)

Operator’s Cab

Model	Maxcab E300/260, can be elevated and moved forward hydraulically
Eye level	approx. 19'0" (5.8 m)

Undercarriage

Model	R83-450
Tracks	B7 triple grouser shoes 31.5" (800 mm)

Lift capacities are stated in pounds. Values in brackets [ ] are stated in metric tons. Indicated figures are based on ISO 10567 and do not exceed 75% or tipping and 87% of hydraulic capacity and machine standing on firm, level supporting surface. Loads are valid for 360° with machine support on outriggers. Lifting capacities do not include working equipment such as orange peel grapples, magnets, clamshells, etc. The load point is the center line of the attachment pivot mounting pin on the stick. Their weights must be deducted from the numbers indicated in the lifting charts. Please contact SENNEBOGEN or your local dealer for optimum attachment selection. The operator / user of the machine should be fully acquainted with the operator’s & safety manual provided by Sennebogen. Capacities apply only to the machine as originally manufactured and equipped by SENNEBOGEN.

K21

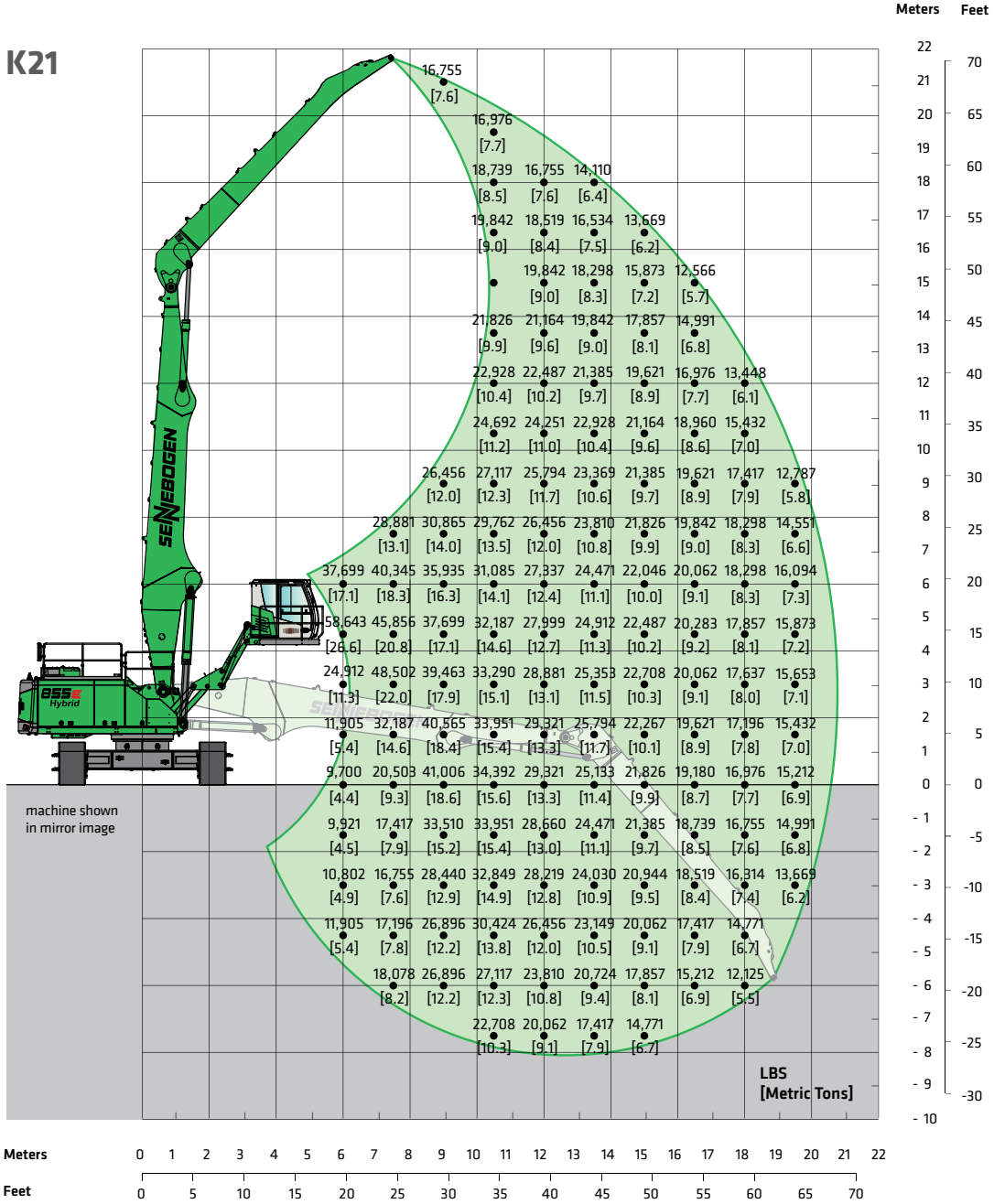

Lift Capacities - 855 R-HD “E”

Working Equipment B19

Reach	62'4" (19.0 m)
Boom	39'4" (12 m) Banana
Stick	27'11" (8.5 m)

Operator’s Cab

Model	Maxcab E300/260, can be elevated and moved forward hydraulically
Eye level	approx. 19'0" (5.8 m)

Undercarriage

Model	R83-450
Tracks	B7 triple grouser shoes 31.5" (800 mm)

Lift capacities are stated in pounds. Values in brackets [ ] are stated in metric tons. Indicated figures are based on ISO 10567 and do not exceed 75% or tipping and 87% of hydraulic capacity and machine standing on firm, level supporting surface. Loads are valid for 360° with machine support on outriggers. Lifting capacities do not include working equipment such as orange peel grapples, magnets, clamshells, etc. The load point is the center line of the attachment pivot mounting pin on the stick. Their weights must be deducted from the numbers indicated in the lifting charts. Please contact SENNEBOGEN or your local dealer for optimum attachment selection. The operator / user of the machine should be fully acquainted with the operator’s & safety manual provided by Sennebogen. Capacities apply only to the machine as originally manufactured and equipped by SENNEBOGEN.

B19

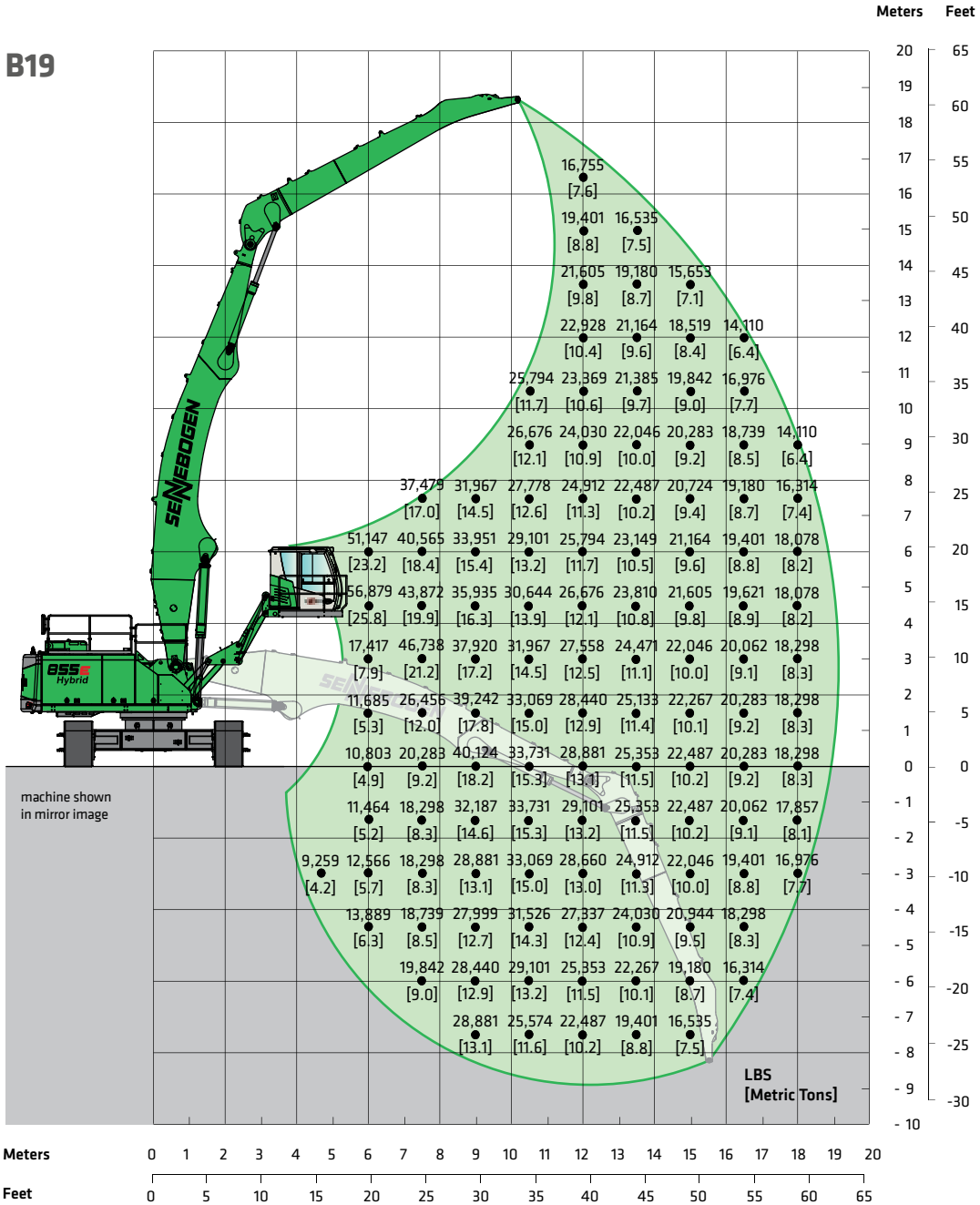

Lift Capacities - 855 R-HD “E”

Working Equipment B20

Reach	65'7" (20.0 m)
Boom	65'7" (12 m) Banana
Stick	39'4" (9.5 m)

Operator’s Cab

Model	Maxcab E300/260, can be elevated and moved forward hydraulically
Eye level	approx. 19'0" (5.8 m)

Undercarriage

Model	R83-450
Tracks	B7 triple grouser shoes 31.5" (800 mm)

Lift capacities are stated in pounds. Values in brackets [ ] are stated in metric tons. Indicated figures are based on ISO 10567 and do not exceed 75% or tipping and 87% of hydraulic capacity and machine standing on firm, level supporting surface. Loads are valid for 360° with machine support on outriggers. Lifting capacities do not include working equipment such as orange peel grapples, magnets, clamshells, etc. The load point is the center line of the attachment pivot mounting pin on the stick. Their weights must be deducted from the numbers indicated in the lifting charts. Please contact SENNEBOGEN or your local dealer for optimum attachment selection. The operator / user of the machine should be fully acquainted with the operator’s & safety manual provided by Sennebogen. Capacities apply only to the machine as originally manufactured and equipped by SENNEBOGEN.

B20

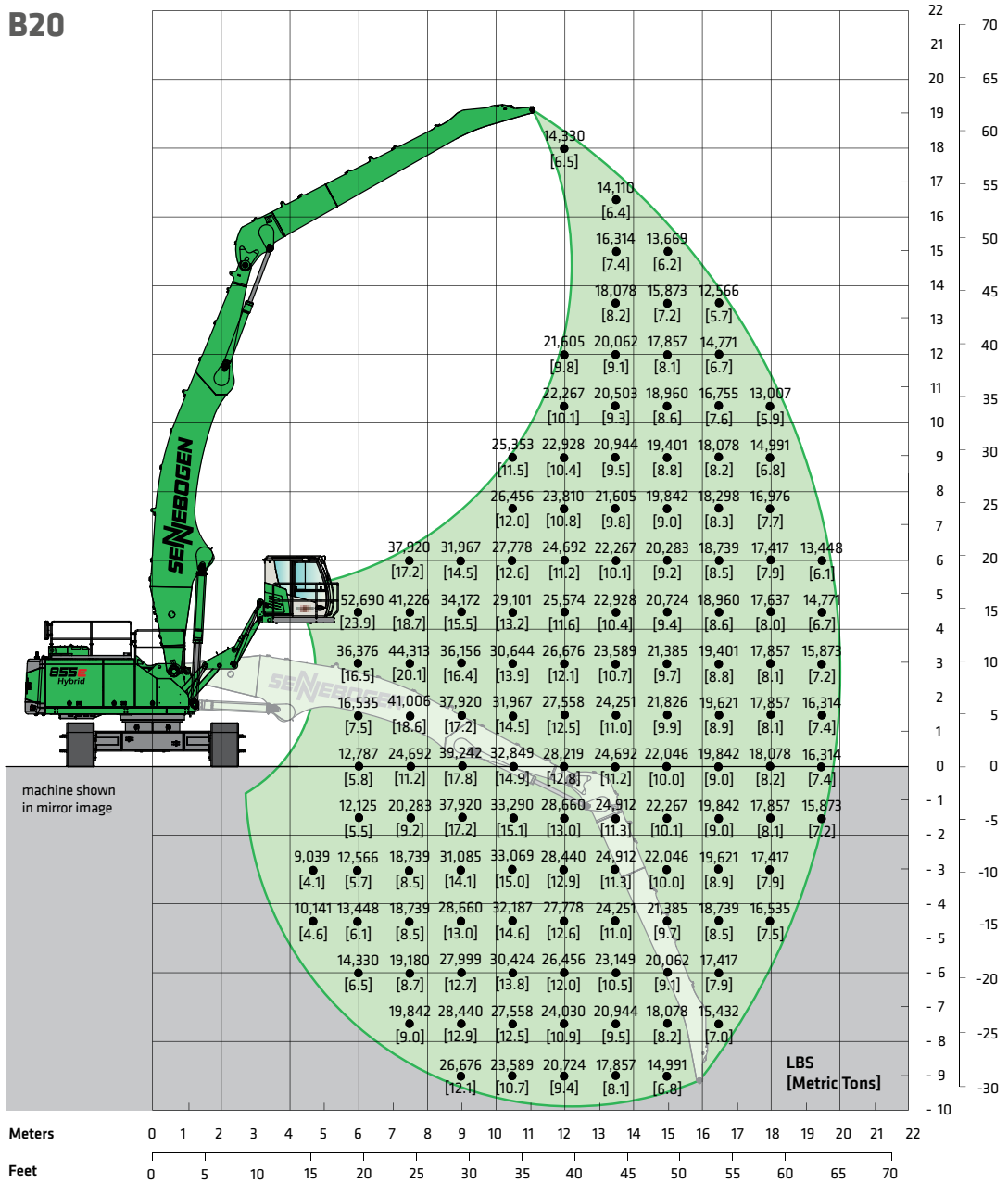

Standard / Optional Equipment

ENGINE	855 M	855 R-HD
Water separator in fuel line	●	●
Automatic idle / engine stop control	●	●
Eco mode	●	●
Air Filter Pre-cleaner	●	●
Visual fuel tank check	●	●
Engine block & water separator pre-heater	○	○
ELECTRIC		
Battery disconnect switch	●	●
Centralized fuse box	●	●
HYDRAULIC		
Pilot pressure controlled variable displacement pump	●	●
Thermostatically controlled cooling system	●	●
Centralized hydraulic test ports	●	●
Protection covers for pilot pressure control valves	●	●
3 micron dual filtration system	●	●
Load sensing, flow on demand hydraulic system	●	●
Optimized hydraulic pump regulation (GLR)	●	●
Visual hydraulic tank check from ground level	●	●
Attachments open, close & rotation hydraulics	●	●
Hydraulic tank shut off valve	●	●
Electrical hydraulic tank pre-heater	○	○
Biodegradable hydraulic oil	○	○
Hydraulic circuit for scrap shear	○	○
Additional hydraulic circuit slasher	○	○
Additional hydraulic circuits	○	○
Attachment return filtration filters (60 µm)	○	○
SWING SYSTEM		
360° protection cover, removable	●	●
Electrical driven swing gear pinion lubrication pump	●	●
MAGNET SYSTEM		
Hydraulic driven generator	○	○
Magnet controller	○	○
Magnet suspension link	○	○

UPPER CARRIAGE	855 M	855 R-HD
Rearview & right side view camera system	●	●
Automatic lubrication system	●	●
Anti-slip mats on walking area	●	●
Lockable side doors	●	●
Handrails on top of upper carriage	●	●
Mirror left side	●	●
Turning signal lights in upper carriage frame	●	●
Removable panels	●	●
Additional light package	○	○
Custom colors	○	○
Seawater paint coating	○	○
OPERATOR'S CAB (Maxcab)		
Hydraulic elevating up and out cab E270	●	●
Multi adjustable, air suspended operator's seat	●	●
3" (76 mm) seat belt	●	●
Seat heater	●	●
Automatic climate control (heater / AC)	●	●
Air outlets w / defroster	●	●
Storage area for lunch box	●	●
Large cup holder	●	●
Fire extinguisher	●	●
Tinted windows with safety glass	●	●
Door window as sliding window	●	●
Radio with USB and SD port, MP3 and Bluetooth	●	●
Removable floor mat	●	●
SenCon diagnostic system	●	●
Multicolor Monitor	●	●
Tilt out front window	●	●
Halogen light package on cab roof	●	●
Mechanical hour meter	●	●
Sliding door	●	●
Catwalk w / handrail	●	●
12 V / 24 V power outlet	●	●
Windshield wiper and washers	●	●
Emergency exit hammer	●	●
Safety lever	●	●
Sun shades	●	●

OPERATOR'S CAB (Maxcab) continued	855 M	855 R-HD
Interior lighting	●	●
Rain cover front window	●	●
Outside mirror	●	●
Optical and acoustic warning system	●	●
Positive filtered ventilation (pressurized cab)	●	●
Safety check valves for elevating cab cylinder	●	●
Foot rest	●	●
Bulletproof windshield	●	●
Bulletproof skylight	●	●
Maxcab industry	○	○
Windshield protection guard	○	○
Skylight protection guard	○	○
Skylight FOPS guard	○	○
Polycarbonate side windows	○	○
Additional light package	○	○
Fixed cab elevation	○	○
Hydraulic elevating up and out cab E300/260	○	○
Operator's cab with floor window	○	○
Steering column instead of joystick steering	○	○
Steering column in combination with joystick steering	○	○
Additional cameras	○	○

WORKING EQUIPMENT		
Purpose built material handling boom	●	●
Green Hybrid energy recovery system	●	●
Purpose-built material handling stick	●	●
Attachment hydraulic line connections with ball valves	●	●
Safety check valves for stick cylinders	●	●
Safety check valves for boom cylinders	●	●
Cylinder end position dumping	●	●
Boom hoist limitation	●	●
Bronze bushings connected to automatic lubrication system	●	●
Stick limitation	●	●
LED light package boom	○	○
LED light package stick	○	○
Purpose-built material handling boom for scrap shears	○	○

UNDERCARRIAGE	855 M	855 R-HD
Heavy duty designed material handling undercarriage	●	●
Heavy duty axles	●	N/A
Solid rubber tires 14.00-24 (8x) incl. intermediate ring	●	N/A
Planetary axles with integrated steering cylinders	●	N/A
Drive train protection guards	●	N/A
Centralized lubrication points	●	N/A
Servo brake system	●	●
MP80 E undercarriage with integrated 4-point outrigger system	●	N/A
Tool and storage compartments, lockable	●	●
Individual outrigger control	●	N/A
Travel alarm	●	●
Crawler undercarriage with mechanical adjustable tracks	N/A	●
Heavy duty crawler track frame	N/A	●
31.5" (800 mm) triple grouser track shoes, canted	N/A	●
B7 Maintenance free crawlers	N/A	●
Hydraulic chain tension device	N/A	●
Increased size outrigger pads to decrease ground pressure	○	N/A

ATTACHMENTS		
Orange peel grapple	○	○
Mag Grapple	○	○
Clamshell	○	○
Magnet	○	○
Scrap shear	○	○
Power attachment	○	○
Pipe handler	○	○

OUR COMPLETE LINE OF

PURPOSE-BUILT MATERIAL HANDLERS

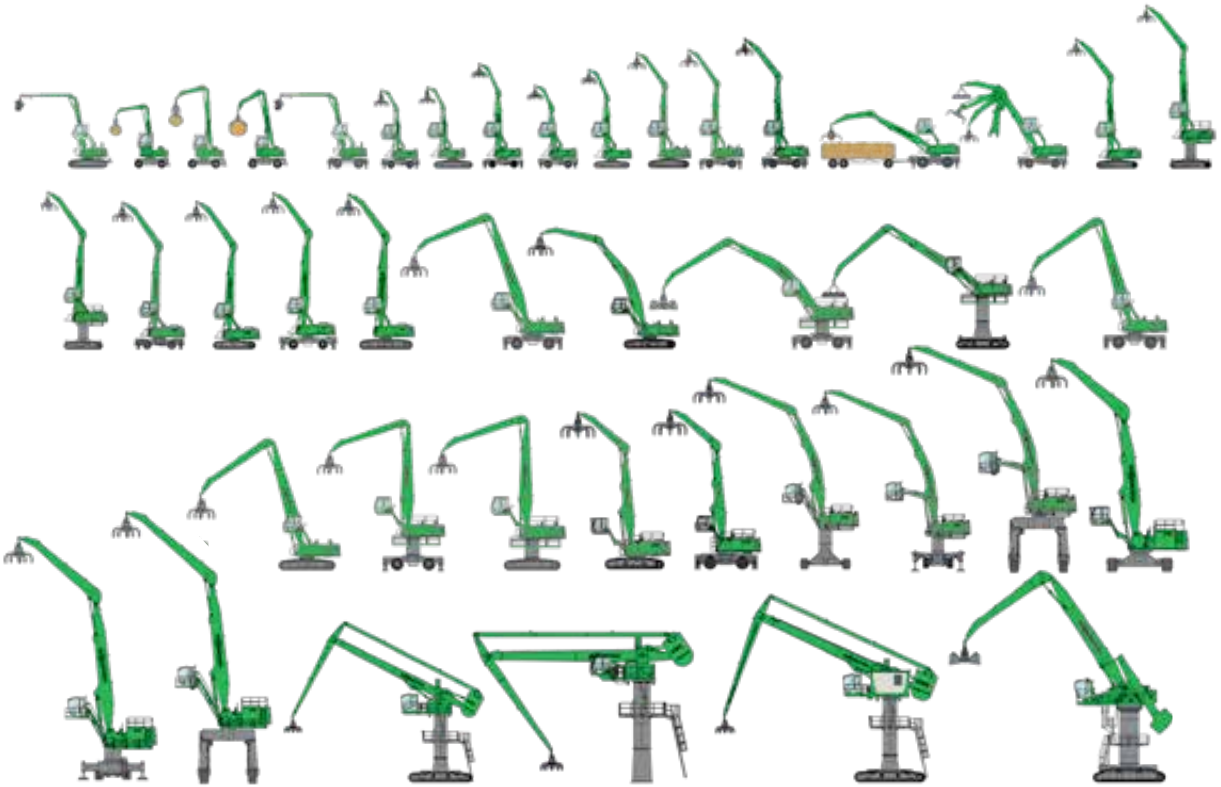

SENNEBOGEN®

SENNEBOGEN LLC
1957 Sennebogen Trail
Stanley, NC 28164 USA

Phone +1 (704) 347-4910
Fax +1 (704) 347-8894
Email sales@sennebogenllc.com

855E/M/RHD-0221