Technical Specifications

SENNEBOGEN Rubber Tired Material Handler

Leading Through Innovation

Engine

Model	Cummins QSB6.7, Tier 4 Final
Net Power	225 HP (168 kW)

Operating Weight

M/rubber tired	84,900 lb (38,500 kg)

Reach

standard	50'1" (15.26 m) (stick pin)

Magnet System

rating	20 kW

830E M

SENNEBOGEN

Technical Specifications 830 M "E"

ENGINE	
model	Cummins QSB6.7-C225
type	in-line, 6 cylinder, cooled exhaust gas recirculation, water cooled
emission	EPA Tier 4 Final
net power	225 HP (168 kW) @ 2,000 rqm
injection	high pressure common-rail
displacement	6.7 L (408 cu.in.)
bore	4.21 in (107 mm)
stroke	4.88 in (124 mm)
aspiration	turbo charged, charge air cooled
fuel tank	132 gal (500L)
air filtration	direct flow filtration system dual stage filter with pre-filter
control	integrated ECM automatic idle - stop eco mode

ELECTRICAL	
alternator	100 V/Ah
starter	24 V, 7.8 kW
battery	2 x 12 V, 150 Ah
lights	2 x cab roof, type halogen 2 x frame upper carriage, type H4

HYDRAULIC SYSTEM	
system type	LUDV load sensing pilot pressure controlled open center
pump type	variable-displacement axial-piston pump
max. pump flow	137 gpm (520 l / m)
max. pressure	5,076 psi (350 bar)
hydraulic tank	82 gal (310 L)
hydraulic system	180 gal (680 L)
filtration	dual filtration system 3 micron (HydroClean)

COOLING	
cooling type	cool-on-demand, suction-type fan system, side by side
hydraulic / water	hydraulic fan drive axial piston pump, reversible fan thermo-statically controlled, closed loop system
charge air	direct fan drive

WEIGHT	
operating weight	84,900 lb (38,500 kg)

SWING SYSTEM	
swing speed	0 - 8 rpm
swing hydraulic	open loop
drive	1 x axial piston motor driving planetary gearbox, integrated brake valves
swing brake	multidisc brake, spring loaded
swing bearing	external teeth, sealed ball bearing

TRAVEL / UNDERCARRIAGE	
type	rubber tired MP30E
drive system	all-wheel drive, variable displacement motor with dual stage power shift transmission
travel speed	1st 0-4.35 mph (0-7 km/h) 2nd 0-12.43 mph (0-20 km/h)
tires	8 x 12.00-20 (solid rubber)
steering	joystick steering
front axle	oscillating with hydraulic lock, integrated safety check valves
rear axle	fixed
service brake	disc brake
parking brake	multidisc brake spring loaded
safety	travel alarm

REFILL CAPACITIES	
fuel tank	132 gal (500 L)
engine cooling system	13.20 gal (50.0 L)
engine oil w / filter	4.49 gal (17.0 L)
hydraulic tank	82 gal (310 L)
hydraulic system	180 gal (680 L)
swing gear	1.06 gal (4.0 L)
axle hub (front axle)	031 gal (1.2 L)
axle hub (rear axle)	0.39 gal (1.5 L)
axle differential (front axle)	6.9 gal (26.0 L)
axle differential (rear axle)	5.1 gal (19.5 L)
axle transmission	0.8 gal (3.0 L)
swing ring lubrication reservoir	0.26 gal (1.0 L)
central lubrication reservoir	5.5 lb (2.5 kg)
diesel exhaust fluid	7.93 gal (30 L)

MAGNET SYSTEM	
rating	20 kW
voltage (magnetized)	230 V
current (cold condition)	87 Amps
controller	Hubbell
generator	Baldor
drive	hydraulic

Subject to technical modification.

Standard / Optional Equipment 830 M “E”

ENGINE	
Water separator in fuel line	●
Automatic idle / engine stop control	●
Eco mode	●
Visual fuel tank check	●
Engine block & water separator pre-heater	○

ELECTRIC	
Battery disconnect switch	●
Centralized fuse box	●
Battery jump start connection from ground level	●

HYDRAULIC	
Pilot pressure controlled variable displacement pump	●
Thermostatically controlled cooling system	●
Centralized hydraulic test ports	●
Protection covers for pilot pressure control valves	●
3 micron dual filtration system	●
Load sensing, flow on demand hydraulic system	●
Optimized Hydraulic pump regulation (GLR)	●
Visual hydraulic tank check from ground level	●
Attachments open, close & rotation hydraulics	●
Hydraulic tank shut off valve	●
Electrical hydraulic tank pre-heater	○
Biodegradable hydraulic oil	○
Hydraulic circuit for scrap shear	○
Hydraulic circuit for hammer, breaker	○
Hydraulic circuit for circuit slasher	○
Additional hydraulic circuits	○
Attachment return filtration filters (60 µm)	○

UPPER CARRIAGE	
Rearview & right side view camera system	●
Automatic lubrication system	●
Anti-slip mats on walking area	●
Lockable side doors	●
Handrails on top of upper carriage	●
Mirror left side	●
Turning signal lights in upper carriage frame	●
Removable panels	●
Additional light package	○
Custom colors	○
Seawater paint coating	○

OPERATORS CAB (maXCab)	
Hydraulic elevating cab system E260	●
Multi adjustable, air suspended operators seat	●
3” (76 mm) seat belt	●
Seat heater	●
Automatic climate control (heater / AC)	●
Air outlets w / defroster	●
Storage area for lunch box	●
Large cup holder	●
Fire extinguisher	●
Tinted windows with safety glass	●
Door window as sliding window	●
AM / FM Radio with CD player & speakers	●
Removable floor mat	●
SenCon diagnostic system	●
Multicolor monitor	●
Tilt out front window	●
Halogen light package on cab roof	●
Mechanical hour meter	●
Sliding door	●
Catwalk w / handrail	●
12 V / 24 V power outlet	●
Windshield wiper and washers	●
Emergency exit hammer	●
Safety lever	●
Sun shades	●
Interior lighting	●
Rain cover over front window	●
Outside mirror	●

OPERATORS CAB (maXCab)	
Optical and acoustic warning system	●
Positive filtered ventilation (pressurized cab)	●
Safety check valves for elevating cab cylinder	●
Foot rest	●
maXCab industry	○
Windshield protection guard	○
Skylight protection guard	○
Skylight FOPS guard	○
Bullet proof windshield	○
Bullet proof skylight	○
Polycarbonate side windows	○
Additional light package	○
Fixed cab elevation	○
Hydraulic elevating up and out cab E300/260	○
Operators cab with floor window	○
Steering column instead of joystick steering	○
Steering column in combination with joystick steering	○
Additional cameras	○

UNDERCARRIAGE	
Robust designed material handling under carriage	●
Heavy duty axles	●
Solid rubber tires 12.00-20 (8x) incl. intermediate ring	●
Front axle automatic oscillating axle unlock (travel position)	●
Dual stage power shift transmission	●
Drive train protection guards	●
Travel alarm	●
Centralized lubrication points	●
2 circuit servo brake system	●
4-point outriggers integrated safety check valves in outrigger cylinders	●
Tool and storage compartments, lockable	●
Individual outrigger control	○
Increased size outrigger pads to decrease ground pressure	○
Pneumatic tires 12.00-20 (8x)	○
Towing hitch package	○
Below grade, bent outrigger legs	○
Increased size outrigger pads to decrease ground pressure	○

WORKING EQUIPMENT	
Purpose built material handling boom	●
Purpose built material handling stick	●
Attachment hydraulic line connections with ball valves	●
Safety check valves for stick cylinders	●
Safety check valves for boom cylinders	●
Cylinder end position dumping	●
Boom hoist limitation	●
Bronze bushings connected to automatic lubrication system	●
Stick limitation	●
Halogen light package boom	○
Purpose built material handling stick with reversing linkage	○
Purpose built material handling boom for scrap shears	○

MAGNET SYSTEM	
Hydraulic driven generator	●
Magnet controller	●
Magnet suspension link	○

ATTACHMENTS	
Orange peel grapple	○
Mag grapple	○
Clamshell	○
Magnet	○
Log grapple	○
Scrap shear	○
Power attachment	○
Pipe handler	○
Live heel	○

SWING SYSTEM	
360° protection cover, removable	●
Manual operated swing gear pinion lubrication system	●

Subject to technical modification.

Standard Equipment ●
Optional Equipment ○

830 M "E" Lift Capacities

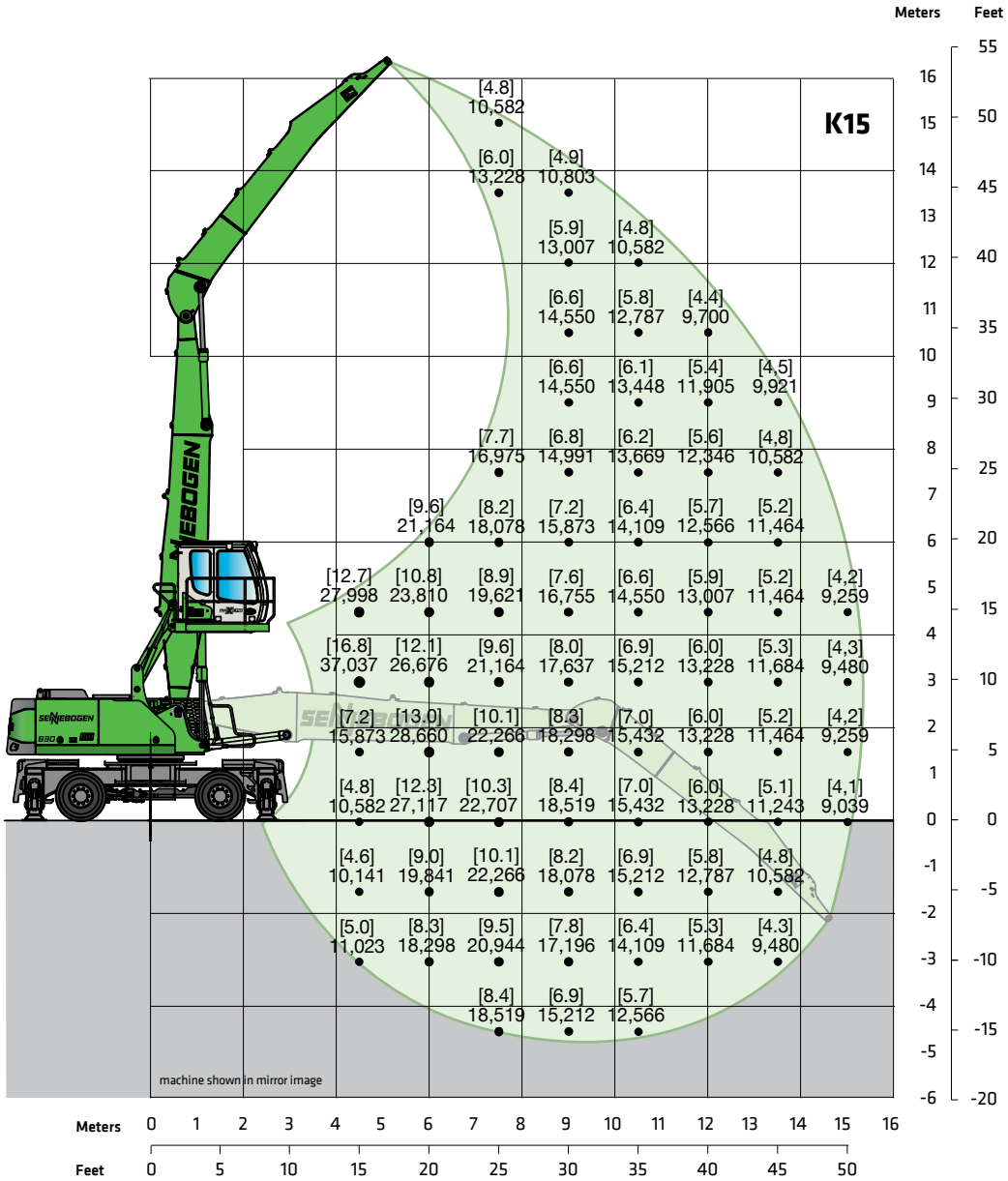

Working Equipment K15		Operator's Cab		Undercarriage	
reach	50'1" (15.24 m)	model	E270 maXCab	model	MP30E
boom	27'11" (8.5 m)		hydraulic elevating up		4-point outriggers
stick	23' (7.0 m)		8'8" (2.65 m) elevation	tires	8 x 12.00-20
		eye level	approx. 18' (5.5 m)		solid rubber

Lift capacities are stated in pounds. Values in [ ] are stated in metric tons. Indicated figures are based on ISO 10567 and do not exceed 75% or tipping and 87% of hydraulic capacity and machine standing on firm, level supporting surface. Loads are valid for 360° with machine support on outriggers. Lifting capacities do not include working equipment such as orange peel grapples, magnets, clamshells, etc. The load point is the center line of the attachment pivot mounting pin on the stick. Their weights must be deducted from the numbers indicated in the lift charts. Please contact Sennebogen or your local dealer for optimum attachment selection. The operator / user of the machine should be fully acquainted with the operator's & safety manual provided by Sennebogen. Capacities apply only to the machine as originally manufactured and equipped by Sennebogen.

830 M "E" Lift Capacities

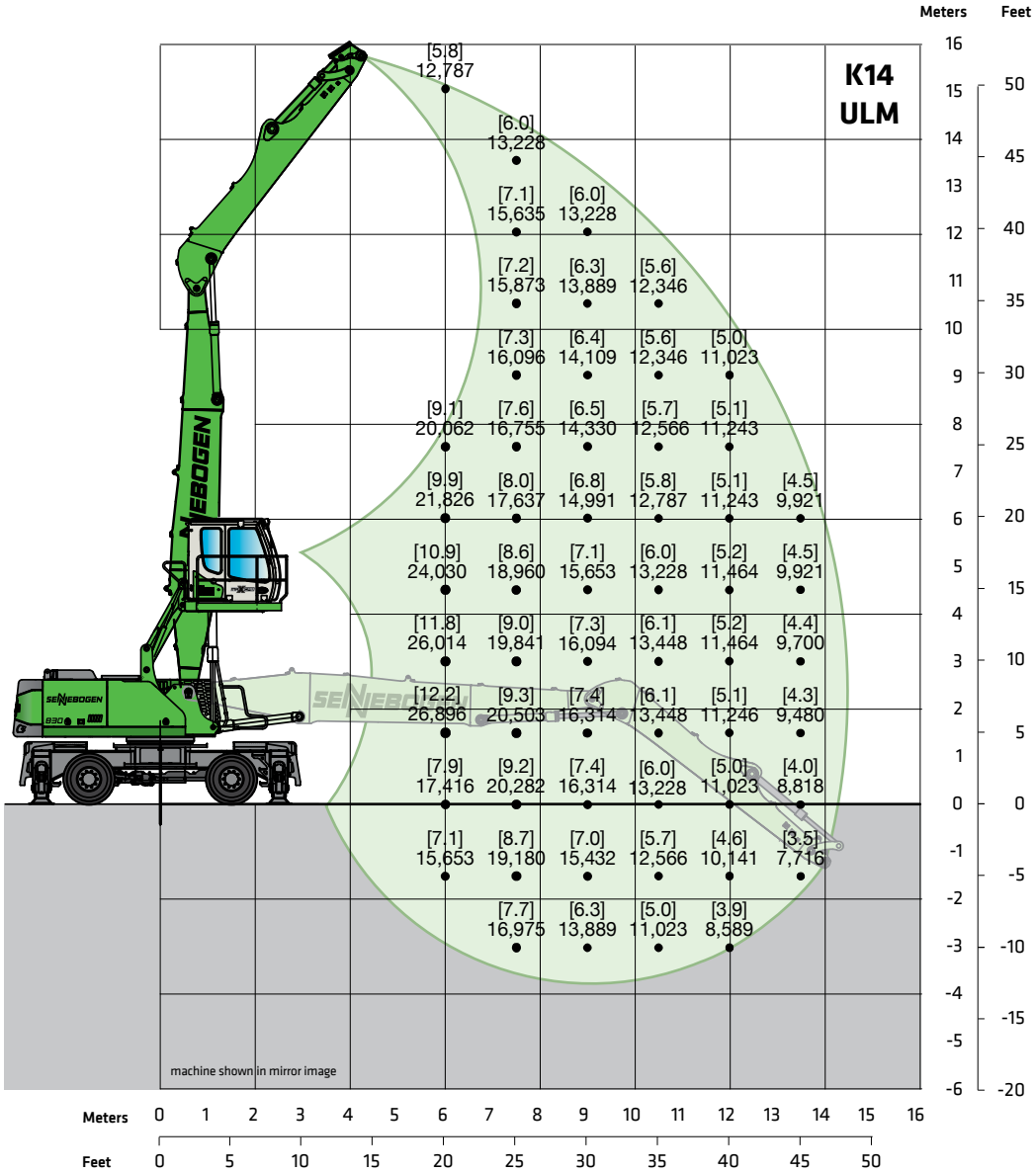

Working Equipment K14 ULM		Operator's Cab		Undercarriage	
reach	47'6" (14.47 m)	model	E270 maXCab	model	MP30E
boom	27'11" (8.5 m)		hydraulic elevating up		4-point outriggers
stick	19'8" (6.0 m)		8'8" (2.65 m) elevation	tires	8 x 12.00-20
		eye level	approx. 18' (5.5 m)		solid rubber

Lift capacities are stated in pounds. Values in [ ] are stated in metric tons. Indicated figures are based on ISO 10567 and do not exceed 75% or tipping and 87% of hydraulic capacity and machine standing on firm, level supporting surface. Loads are valid for 360° with machine support on outriggers. Lifting capacities do not include working equipment such as orange peel grapples, magnets, clamshells, etc. The load point is the center line of the attachment pivot mounting pin on the stick. Their weights must be deducted from the numbers indicated in the lift charts. Please contact Sennebogen or your local dealer for optimum attachment selection. The operator / user of the machine should be fully acquainted with the operator's & safety manual provided by Sennebogen. Capacities apply only to the machine as originally manufactured and equipped by Sennebogen.

830 M “E” Transport dimensions

830 M “E“ with undercarriage type MP30E (series) with hydraulic elevating cabin type E270

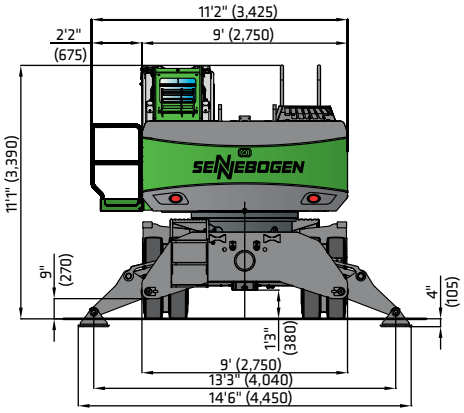

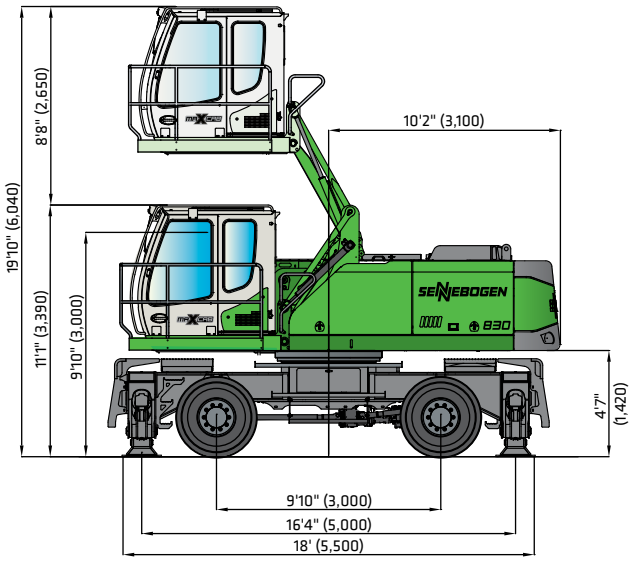

Transport width 9' (2,750 mm)

830 M “E” with hydraulic elevating and forward moving cabin type E300/260

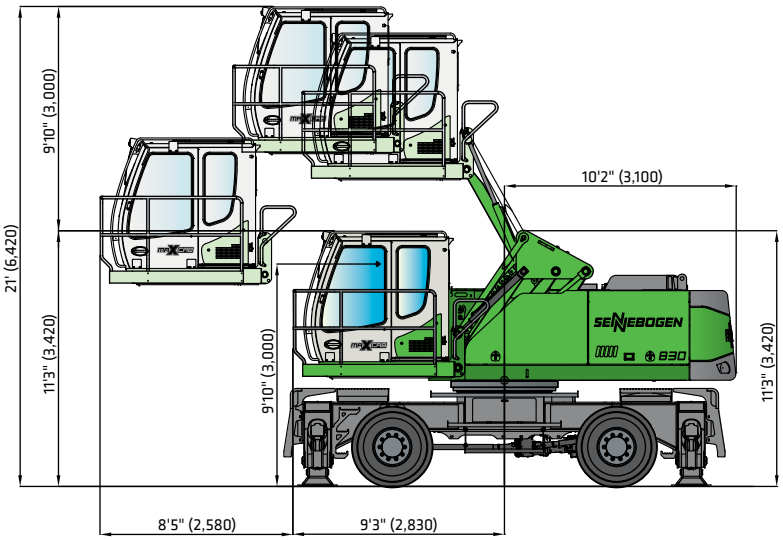

830 M “E” Transport dimensions

830 M “E” with undercarriages type MP30E

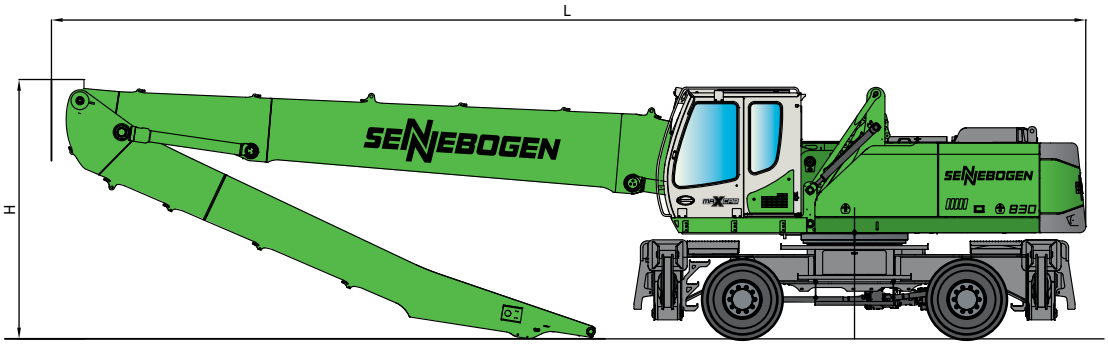

Reach	Boom Length	Stick Length	Transport Length	Transport Height*	Transport Width
K15-1	27'11" (8,500 mm)	23' (7,000 mm)	40'10" (12,450 mm)	11'2" (3,400 mm)	9' (2,750 mm)
K14-1 ULM	27'11" (8,500 mm)	19'8" (6,000 mm)	40'10" (12,450 mm)	11'2" (3,400 mm)	9' (2,750 mm)

transport dimensions valid for boom position 1 only • boom position 2 may increase transport height & transport length • handrails, catwalks & other accessories are disassembled for transportation • *optional cab E300/260 will increase machine transport height by 2" (50 mm)

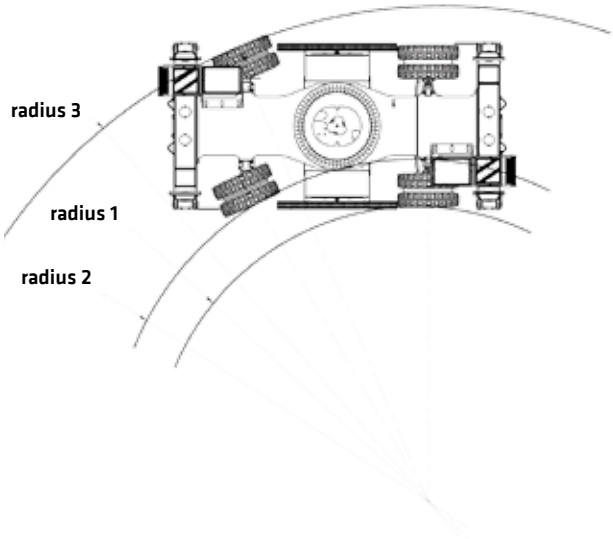

Undercarriage	Radius 1	Radius 2	Radius 3
830 M “E” MP30E	36'8" (11.2 m)	41' (12.5 m)	58'7" (17.9 m)

830E M

"Under our policy of continuous improvements we reserve the right to change specifications, materials and design without prior notice. The illustrations shown may include optional equipment. See your ***SENNEBOGEN*** dealer for further information."

SENNEBOGEN LLC
1957 Sennebogen Trail
Stanley, NC 28078, USA

Phone +1 (704) 347-4910
Fax +1 (704) 347-8894
Email sales@sennebogenllc.com

830M/E-0315

GO FOR GREEN

www.sennebogen-na.com